SECTION EI

EXTERIOR & INTERIOR

CONTENTS

PRECAUTIONS **3**
Precautions for Supplemental Restraint System (SRS) "AIR BAG" and "SEAT BELT PRE-TENSIONER" 3
Precautions 3
PREPARATION **4**
Special Service Tools 4
Commercial Service Tools 4
SQUEAK AND RATTLE TROUBLE DIAGNOSES **5**
Work Flow 5
CUSTOMER INTERVIEW 5
DUPLICATE THE NOISE AND TEST DRIVE 6
CHECK RELATED SERVICE BULLETINS 6
LOCATE THE NOISE AND IDENTIFY THE ROOT CAUSE 6
REPAIR THE CAUSE 6
CONFIRM THE REPAIR 7
Generic Squeak and Rattle Troubleshooting 7
INSTRUMENT PANEL 7
CENTER CONSOLE 7
DOORS 7
TRUNK 8
SUNROOF/HEADLINING 8
SEATS 8
UNDERHOOD 8
Diagnostic Worksheet 9
CLIP AND FASTENER **11**
Clip and Fastener 11
FRONT BUMPER **14**
Removal and Installation 14
REMOVAL 15
INSTALLATION 15
REAR BUMPER **16**
Removal and Installation 16
REMOVAL 17
INSTALLATION 17
REMOVAL AND INSTALLATION OF FUEL TUBE COVER 17
FRONT GRILLE **18**
Removal and Installation 18
REMOVAL 18
INSTALLATION 18
COWL TOP **19**
Removal and Installation 19
REMOVAL 19
INSTALLATION 19
FENDER PROTECTOR **20**
Removal and Installation 20
REMOVAL 20
INSTALLATION 20
DOOR OUTSIDE MOLDING **21**
Removal and Installation 21
FRONT DOOR OUTSIDE MOLDING 21
REAR DOOR OUTSIDE MOLDING 21
SIDE GUARD MOLDING **23**
Removal and Installation 23
SIDE GUARD MOLDING (FRONT AND REAR) 23
DOOR OUTSIDE LOWER MOLDING **24**
Removal and Installation 24
DOOR OUTSIDE LOWER MOLDING (FRONT AND REAR) 24
SIDE SILL PROTECTOR **25**
Removal and Installation 25
REMOVAL 25
INSTALLATION 25
MUDGUARD **26**
Removal and Installation 26
REMOVAL 26
INSTALLATION 26
ROOF RAIL **27**
Removal and Installation for Hyper Roof Rail 27
REMOVAL 27
INSTALLATION 27
Removal and Installation for Roof Rail 28
REMOVAL 28
INSTALLATION 29

ROOF SPOILER **30**
Removal and Installation 30
REMOVAL 30
INSTALLATION 30
LICENSE LAMP FINISHER **31**
Removal and Installation 31
REMOVAL 31
INSTALLATION 31
DOOR FINISHER **32**
Removal and Installation 32
FRONT AND REAR DOOR FINISHER 33
BACK DOOR TRIM **35**
Removal and Installation 35
REMOVAL 35
INSTALLATION 35
BODY SIDE TRIM **36**
Removal and Installation 36
FRONT PILLAR GARNISH 37
DASH SIDE FINISHER 37
KICKING PLATE (FRONT/REAR) 37
CENTER PILLAR LOWER GARNISH 37
CENTER PILLAR UPPER GARNISH 37
BODY SIDE WELT (FRONT/REAR) 37
REAR PILLAR FINISHER 38
LUGGAGE REAR PLATE 38
LUGGAGE SIDE LOWER FINISHER 38
FLOOR TRIM **39**
Removal and Installation 39
REMOVAL 39
INSTALLATION 39
HEADLINING **40**
Removal and Installation 40
REMOVAL 40
INSTALLATION 41

PRECAUTIONS

PFP:00001

Precautions for Supplemental Restraint System (SRS) “AIR BAG” and “SEAT BELT PRE-TENSIONER”

AIS005RZ

The Supplemental Restraint System such as “AIR BAG” and “SEAT BELT PRE-TENSIONER”, used along with a front seat belt, helps to reduce the risk or severity of injury to the driver and front passenger for certain types of collision. Information necessary to service the system safely is included in the SRS and SB section of this Service Manual.

WARNING:

- **To avoid rendering the SRS inoperative, which could increase the risk of personal injury or death in the event of a collision which would result in air bag inflation, all maintenance must be performed by an authorized NISSAN/INFINITI dealer.**
- **Improper maintenance, including incorrect removal and installation of the SRS, can lead to personal injury caused by unintentional activation of the system. For removal of Spiral Cable and Air Bag Module, see the SRS section.**
- **Do not use electrical test equipment on any circuit related to the SRS unless instructed to in this Service Manual. SRS wiring harnesses can be identified by yellow and/or orange harnesses or harness connectors.**

Precautions

AIS005S0

- When removing or disassembling any part, be careful not to damage or deform it. Protect parts, which may get in the way with cloth.
- When removing parts with a screwdriver or other tool, protect parts by wrapping tools with vinyl or tape.
- Keep removed parts protected with cloth.
- If a clip is deformed or damaged, replace it.
- If an unreusable part is removed, replace it with a new one.
- Tighten bolts and nuts firmly to the specified torque.
- After re-assembly has been completed, make sure each part functions correctly.
- Remove stains in the following way.

Water-soluble stains:
Dip a soft cloth in warm water, and then squeeze it tightly. After wiping the stain, wipe with a soft dry cloth.
Oil stain:
Dissolve a synthetic detergent in warm water (density of 2 to 3% or less), dip the cloth, then clean off the stain with the cloth. Next, dip the cloth in fresh water and squeeze it tightly. Then clean off the detergent completely. Then wipe the area with a soft dry cloth.

- Do not use any organic solvent, such as thinner or benzine.

PREPARATION

PFP:00002

Special Service Tools

AIS0061G

The actual shapes of Kent-Moore tools may differ from those of special service tools illustrated here.

Tool number (Kent-Moore No.) Tool name		Description
(J-39570) Chassis ear	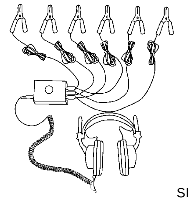 SIIA0993E	Locating the noise
(J-43980) NISSAN Squeak and Rattle Kit	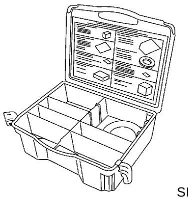 SIIA0994E	Repairing the cause of the noise

Commercial Service Tools

AIS0061H

Tool name		Description
Engine ear	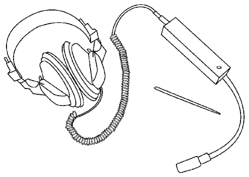 SIIA0995E	Locating the noise

SQUEAK AND RATTLE TROUBLE DIAGNOSES

PFP:00000

Work Flow

AIS00617

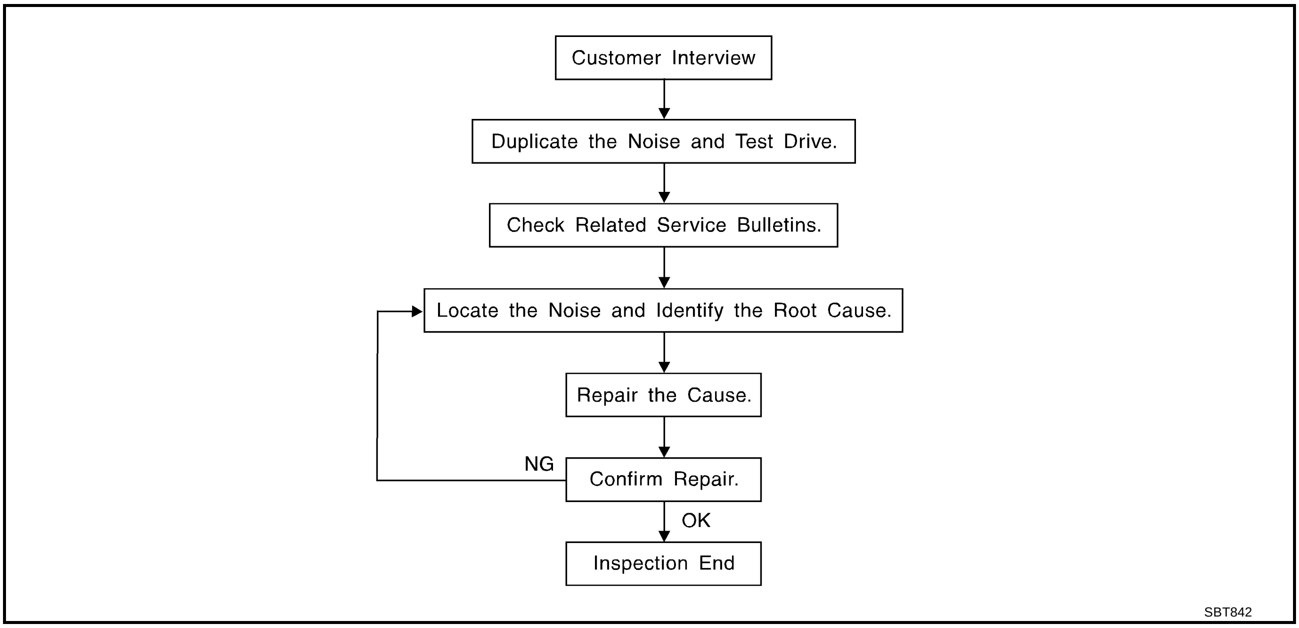

CUSTOMER INTERVIEW

Interview the customer if possible, to determine the conditions that exist when the noise occurs. Use the Diagnostic Worksheet during the interview to document the facts and conditions when the noise occurs and any customer's comments; refer to EI-9, "Diagnostic Worksheet" . This information is necessary to duplicate the conditions that exist when the noise occurs.

- The customer may not be able to provide a detailed description or the location of the noise. Attempt to obtain all the facts and conditions that exist when the noise occurs (or does not occur).
- If there is more than one noise in the vehicle, be sure to diagnose and repair the noise that the customer is concerned about. This can be accomplished by test driving the vehicle with the customer.
- After identifying the type of noise, isolate the noise in terms of its characteristics. The noise characteristics are provided so the customer, service adviser and technician are all speaking the same language when defining the noise.
- Squeak —(Like tennis shoes on a clean floor)
  Squeak characteristics include the light contact/fast movement/brought on by road conditions/hard surfaces=higher pitch noise/softer surfaces=lower pitch noises/edge to surface=chirping
- Creak—(Like walking on an old wooden floor)
  Creak characteristics include firm contact/slow movement/twisting with a rotational movement/pitch dependent on materials/often brought on by activity.
- Rattle—(Like shaking a baby rattle)
  Rattle characteristics include the fast repeated contact/vibration or similar movement/loose parts/missing clip or fastener/incorrect clearance.
- Knock —(Like a knock on a door)
  Knock characteristics include hollow sounding/sometimes repeating/often brought on by driver action.
- Tick—(Like a clock second hand)
  Tick characteristics include gentle contacting of light materials/loose components/can be caused by driver action or road conditions.
- Thump—(Heavy, muffled knock noise)
  Thump characteristics include softer knock/dead sound often brought on by activity.
- Buzz—(Like a bumble bee)
  Buzz characteristics include high frequency rattle/firm contact.
- Often the degree of acceptable noise level will vary depending upon the person. A noise that you may judge as acceptable may be very irritating to the customer.
- Weather conditions, especially humidity and temperature, may have a great effect on noise level.

DUPLICATE THE NOISE AND TEST DRIVE

If possible, drive the vehicle with the customer until the noise is duplicated. Note any additional information on the Diagnostic Worksheet regarding the conditions or location of the noise. This information can be used to duplicate the same conditions when you confirm the repair.
If the noise can be duplicated easily during the test drive, to help identify the source of the noise, try to duplicate the noise with the vehicle stopped by doing one or all of the following:

1) Close a door.
2) Tap or push/pull around the area where the noise appears to be coming from.
3) Rev the engine.
4) Use a floor jack to recreate vehicle “twist”.
5) At idle, apply engine load (electrical load, half-clutch on M/T models, drive position on A/T models).
6) Raise the vehicle on a hoist and hit a tire with a rubber hammer.

- Drive the vehicle and attempt to duplicate the conditions the customer states exist when the noise occurs.
- If it is difficult to duplicate the noise, drive the vehicle slowly on an undulating or rough road to stress the vehicle body.

CHECK RELATED SERVICE BULLETINS

After verifying the customer concern or symptom, check ASIST for Technical Service Bulletins (TSBs) related to that concern or symptom.
If a TSB relates to the symptom, follow the procedure to repair the noise.

LOCATE THE NOISE AND IDENTIFY THE ROOT CAUSE

1. Narrow down the noise to a general area. To help pinpoint the source of the noise, use a listening tool (Chassis Ear: J-39570, Engine Ear and mechanics stethoscope).
2. Narrow down the noise to a more specific area and identify the cause of the noise by:

- removing the components in the area that you suspect the noise is coming from.
  Do not use too much force when removing clips and fasteners, otherwise clips and fastener can be broken or lost during the repair, resulting in the creation of new noise.
- tapping or pushing/pulling the component that you suspect is causing the noise.
  Do not tap or push/pull the component with excessive force, otherwise the noise will be eliminated only temporarily.
- feeling for a vibration with your hand by touching the component(s) that you suspect is (are) causing the noise.
- placing a piece of paper between components that you suspect are causing the noise.
- looking for loose components and contact marks.
  Refer to EI-7, "Generic Squeak and Rattle Troubleshooting" .

REPAIR THE CAUSE

- If the cause is a loose component, tighten the component securely.
- If the cause is insufficient clearance between components:
  - separate components by repositioning or loosening and retightening the component, if possible.
  - insulate components with a suitable insulator such as urethane pads, foam blocks, felt cloth tape or urethane tape. A Nissan Squeak and Rattle Kit (J-43980) is available through your authorized Nissan Parts Department.

CAUTION:
Do not use excessive force as many components are constructed of plastic and may be damaged.

NOTE:
Always check with the Parts Department for the latest parts information.
The following materials are contained in the Nissan Squeak and Rattle Kit (J-43980). Each item can be ordered separately as needed.
URETHANE PADS [1.5 mm (0.059 in) thick]
Insulates connectors, harness, etc.
76268-9E005: 100 × 135 mm (3.94 × 5.31 in)/76884-71L01: 60 × 85 mm (2.36 × 3.35 in)/76884-71L02: 15 × 25 mm (0.59 × 0.98 in)
INSULATOR (Foam blocks)
Insulates components from contact. Can be used to fill space behind a panel.
73982-9E000: 45 mm (1.77 in) thick, 50 × 50 mm (1.97 × 1.97 in)/73982-50Y00: 10 mm (0.39 in) thick, 50 × 50 mm (1.97 × 1.97 in)

INSULATOR (Light foam block)
80845-71L00: 30 mm (1.18 in) thick, 30 × 50 mm (1.18 × 1.97 in)
FELT CLOTHTAPE
Used to insulate where movement does not occur. Ideal for instrument panel applications.
68370-4B000: 15 × 25 mm (0.59 × 0.98 in) pad/68239-13E00: 5 mm (0.20 in) wide tape roll
The following materials, not found in the kit, can also be used to repair squeaks and rattles.
UHMW (TEFLON) TAPE
Insulates where slight movement is present. Ideal for instrument panel applications.
SILICONE GREASE
Used in place of UHMW tape that will be visible or not fit. Will only last a few months.
SILICONE SPRAY
Use when grease cannot be applied.
DUCT TAPE
Use to eliminate movement.

CONFIRM THE REPAIR

Confirm that the cause of a noise is repaired by test driving the vehicle. Operate the vehicle under the same conditions as when the noise originally occurred. Refer to the notes on the Diagnostic Worksheet.

Generic Squeak and Rattle Troubleshooting

AIS00618

Refer to Table of Contents for specific component removal and installation information.

INSTRUMENT PANEL

Most incidents are caused by contact and movement between:

1. The cluster lid A and instrument panel
2. Acrylic lens and combination meter housing
3. Instrument panel to front pillar garnish
4. Instrument panel to windshield
5. Instrument panel mounting pins
6. Wiring harnesses behind the combination meter
7. A/C defroster duct and duct joint

These incidents can usually be located by tapping or moving the components to duplicate the noise or by pressing on the components while driving to stop the noise. Most of these incidents can be repaired by applying felt cloth tape or silicon spray (in hard to reach areas). Urethane pads can be used to insulate wiring harness.

CAUTION:
Do not use silicone spray to isolate a squeak or rattle. If you saturate the area with silicone, you will not be able to recheck the repair.

CENTER CONSOLE

Components to pay attention to include:

1. Shifter assembly cover to finisher
2. A/C control unit and cluster lid C
3. Wiring harnesses behind audio and A/C control unit

The instrument panel repair and isolation procedures also apply to the center console.

DOORS

Pay attention to the:

1. Finisher and inner panel making a slapping noise
2. Inside handle escutcheon to door finisher
3. Wiring harnesses tapping
4. Door striker out of alignment causing a popping noise on starts and stops

Tapping or moving the components or pressing on them while driving to duplicate the conditions can isolate many of these incidents. You can usually insulate the areas with felt cloth tape or insulator foam blocks from the Nissan Squeak and Rattle Kit (J-43980) to repair the noise.

TRUNK

Trunk noises are often caused by a loose jack or loose items put into the trunk by the owner.
In addition look for:

1. Trunk lid dumpers out of adjustment
2. Trunk lid striker out of adjustment
3. The trunk lid torsion bars knocking together
4. A loose license plate or bracket

Most of these incidents can be repaired by adjusting, securing or insulating the item(s) or component(s) causing the noise.

SUNROOF/HEADLINING

Noises in the sunroof/headlining area can often be traced to one of the following:

1. Sunroof lid, rail, linkage or seals making a rattle or light knocking noise
2. Sunvisor shaft shaking in the holder
3. Front or rear windshield touching headlining and squeaking

Again, pressing on the components to stop the noise while duplicating the conditions can isolate most of these incidents. Repairs usually consist of insulating with felt cloth tape.

SEATS

When isolating seat noise it's important to note the position the seat is in and the load placed on the seat when the noise is present. These conditions should be duplicated when verifying and isolating the cause of the noise.
Cause of seat noise include:

1. Headrest rods and holder
2. A squeak between the seat pad cushion and frame
3. The rear seatback lock and bracket

These noises can be isolated by moving or pressing on the suspected components while duplicating the conditions under which the noise occurs. Most of these incidents can be repaired by repositioning the component or applying urethane tape to the contact area.

UNDERHOOD

Some interior noise may be caused by components under the hood or on the engine wall. The noise is then transmitted into the passenger compartment.
Causes of transmitted underhood noise include:

1. Any component mounted to the engine wall
2. Components that pass through the engine wall
3. Engine wall mounts and connectors
4. Loose radiator mounting pins
5. Hood bumpers out of adjustment
6. Hood striker out of adjustment

These noises can be difficult to isolate since they cannot be reached from the interior of the vehicle. The best method is to secure, move or insulate one component at a time and test drive the vehicle. Also, engine RPM or load can be changed to isolate the noise. Repairs can usually be made by moving, adjusting, securing, or insulating the component causing the noise.

Diagnostic Worksheet

AIS00619

SQUEAK & RATTLE DIAGNOSTIC WORKSHEET

Dear Nissan Customer:
We are concerned about your satisfaction with your Nissan vehicle. Repairing a squeak or rattle sometimes can be very difficult. To help us fix your Nissan right the first time, please take a moment to note the area of the vehicle where the squeak or rattle occurs and under what conditions. You may be asked to take a test drive with a service advisor or technician to ensure we confirm the noise you are hearing.

I. WHERE DOES THE NOISE COME FROM? (circle the area of the vehicle)
The illustrations are for reference only, and may not reflect the actual configuration of your vehicle.

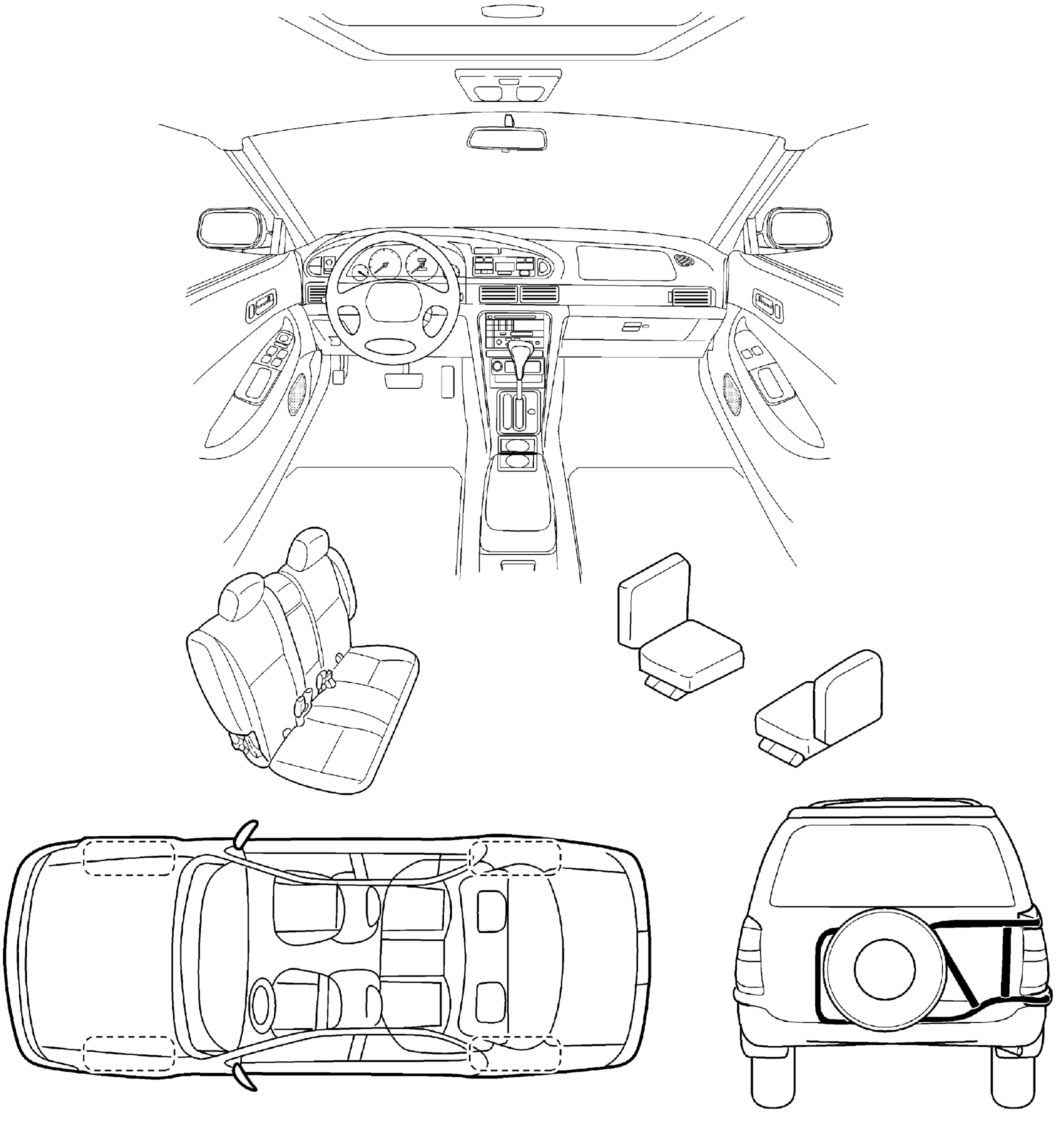

Continue to the back of the worksheet and briefly describe the location of the noise or rattle. In addition, please indicate the conditions which are present when the noise occurs.

PIIB0723E

SQUEAK & RATTLE DIAGNOSTIC WORKSHEET- page 2

Briefly describe the location where the noise occurs:

____

____

II. WHEN DOES IT OCCUR? (check the boxes that apply)

❏ anytime
❏ 1st time in the morning
❏ only when it is cold outside
❏ only when it is hot outside
❏ after sitting out in the sun
❏ when it is raining or wet
❏ dry or dusty conditions
❏ other: ______________________

III. WHEN DRIVING:

❏ through driveways
❏ over rough roads
❏ over speed bumps
❏ only at about ____ mph
❏ on acceleration
❏ coming to a stop
❏ on turns : left, right or either (circle)
❏ with passengers or cargo
❏ other: ________________
❏ after driving ____ miles or ____ minutes

IV. WHAT TYPE OF NOISE?

❏ squeak (like tennis shoes on a clean floor)
❏ creak (like walking on an old wooden floor)
❏ rattle (like shaking a baby rattle)
❏ knock (like a knock on a door)
❏ tick (like a clock second hand)
❏ thump (heavy, muffled knock noise)
❏ buzz (like a bumble bee)

TO BE COMPLETED BY DEALERSHIP PERSONNEL
Test Drive Notes:

____

____

	YES	NO	Initials of person performing
Vehicle test driven with customer	❏	❏	______
- Noise verified on test drive	❏	❏	
- Noise source located and repaired	❏	❏	______
- Follow up test drive performed to confirm repair	❏	❏	______

VIN: ____________________ Customer Name: ______________________________

W.O. #: __________________ Date: ___________

This form must be attached to Work Order

SBT844

CLIP AND FASTENER

PFP:76906

Clip and Fastener

AIS0074Z

Symbol No.	Shapes	Removal & Installation
C101 	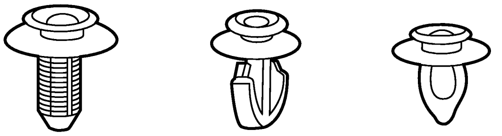	**Removal:** Remove by bending up with flat-bladed screwdrivers or clip remover. 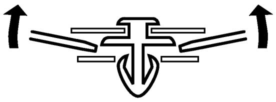
C103 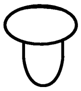	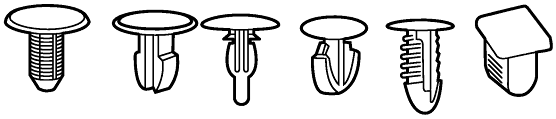	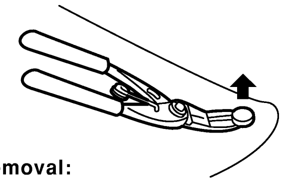 **Removal:** Remove with a clip remover.
C203 	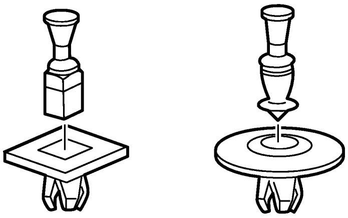	**Removal:** Push center pin to catching position. (Do not remove center pin by hitting it.) 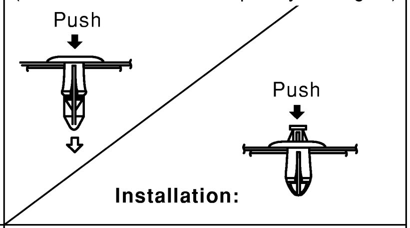
C205 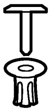	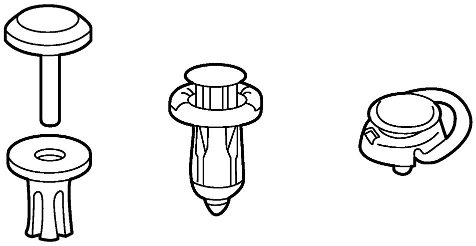	**Removal:** 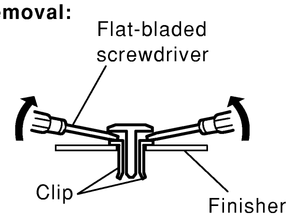
C206 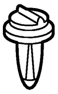	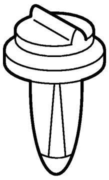	**Removal:** 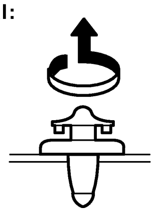

SIIA0315E

Symbol No.	Shapes	Removal & Installation
CE103 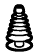	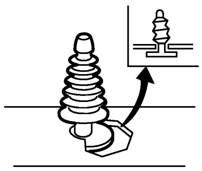	**Removal:** 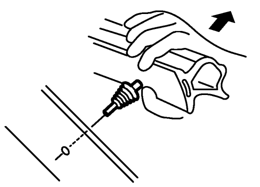
CF110	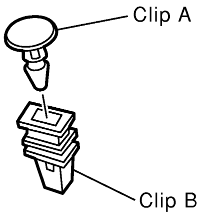	**Removal:** 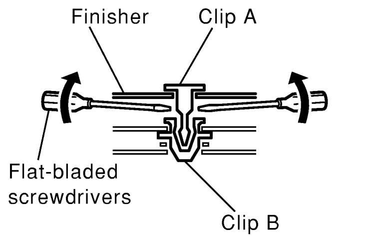
CF118	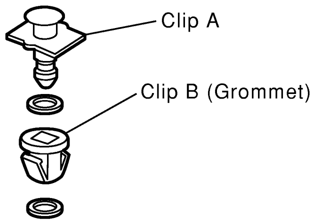	**Removal:** 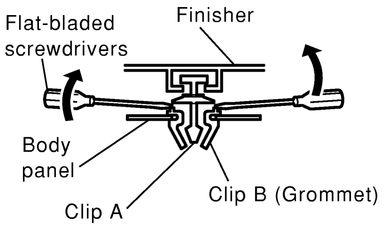
CR103	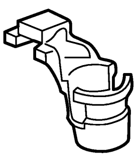	**Removal:** Holder portion of clip must be spread out to remove rod. 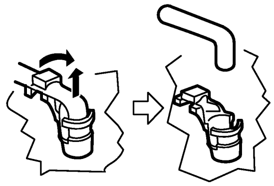
CS101	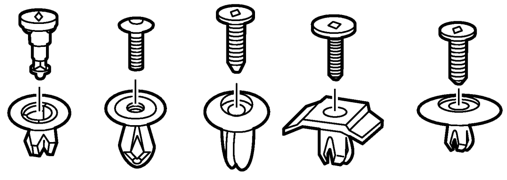	**Removal:** 1. Screw out with a Phillips screwdriver. 2. Remove female portion with flat-bladed screwdriver. 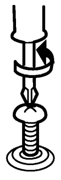

SIIA0316E

Symbol No.	Shapes	Removal & Installation
CG101	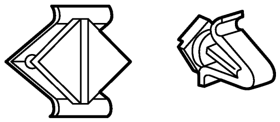	**Removal:** 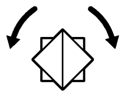 Rotate 45° to remove **Removal:** **Installation:** 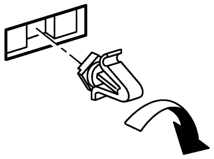
CS102	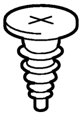	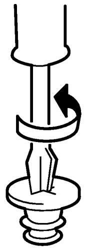
CS113	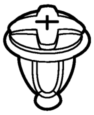	**Removal:** Disconnect upper connection of clip with a flat-bladed screwdriver, then remove clip while inserting a flat-bladed screwdriver between body panel and clip. 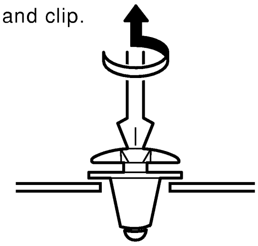
C111	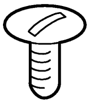	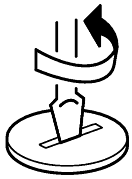

SIIA0317E

FRONT BUMPER

PFP:F2022

Removal and Installation

AIS005S6

CAUTION:

Bumper fascia is made of resin. Do not apply strong force to it, and be careful to prevent contact with oil.

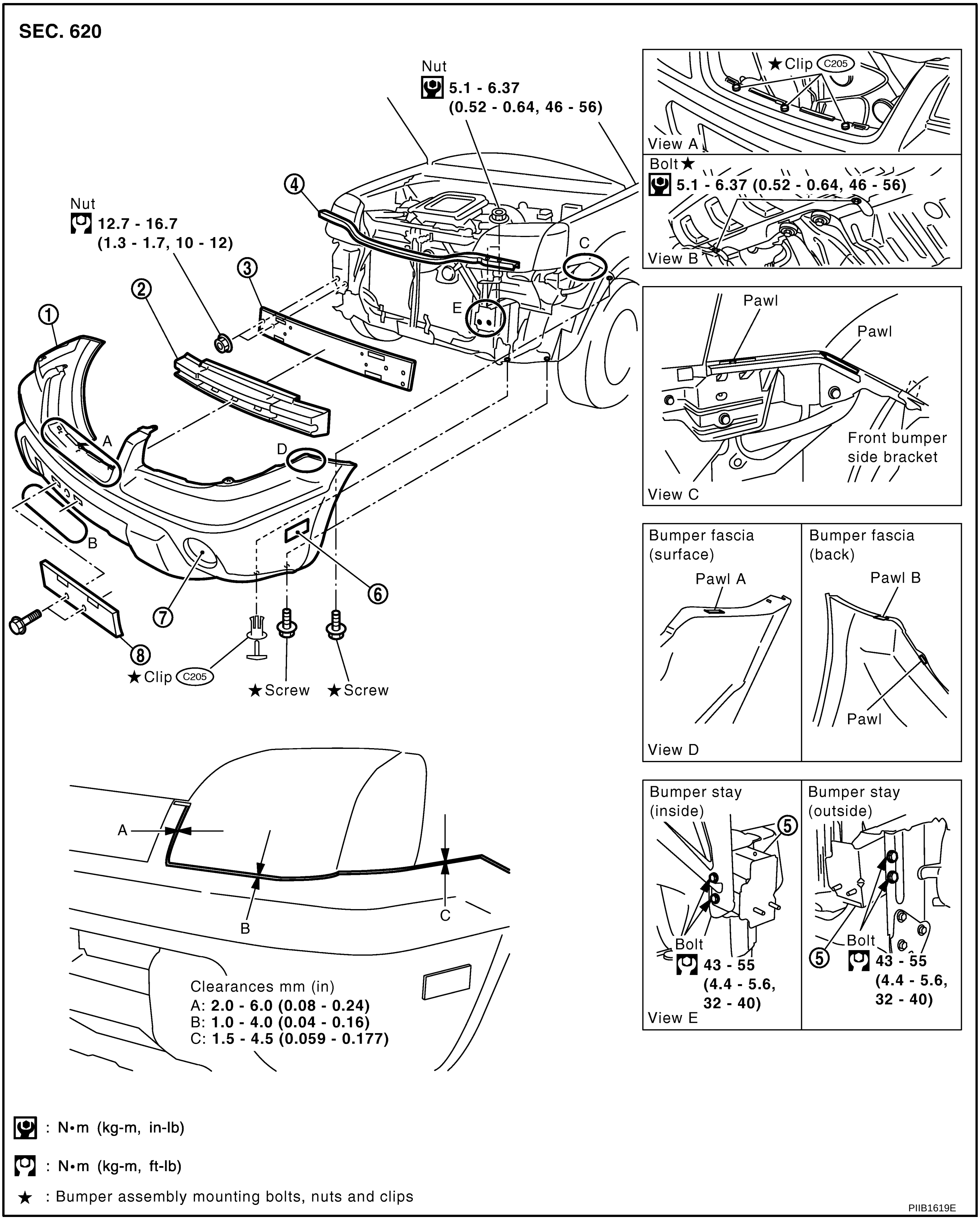

1. Front bumper fascia
2. Energy shock absorber
3. Bumper reinforcement

4. Bumper upper retainer
5. Bumper stay
6. Front side marker lamp
7. Front fog lamp
8. License plate bracket

REMOVAL

1. Remove front grille. Refer to EI-18, "Removal and Installation" .
2. Remove front side marker lamp and disconnect front side marker lamp harness connectors.

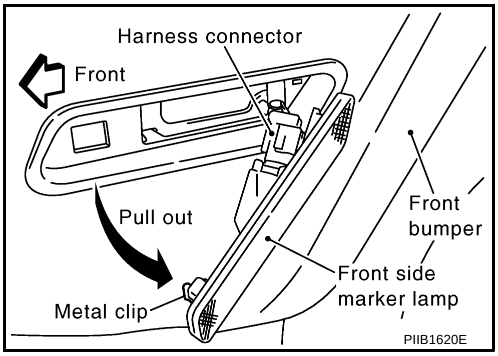

3. Remove mounting screws and clips on front fender protector (right/left).
4. Remove front bumper fascia mounting screws from front fender (right/left).
5. Remove clips from the top surface of front bumper and bolts from the lower surface.
6. Press down pawls A (1 each on left/right sides) on bumper fascia to remove. Then disengage pawls B (1 each on left/right sides) on the fender and disconnect front fog lamp harness connectors.
7. Remove front bumper fascia assembly.

   CAUTION:
   When removing bumper fascia, 2 workers are required so as to prevent it from dropping.
8. Remove energy shock absorber.
9. Remove mounting nuts from bumper reinforcement assembly.
10. Remove mounting nuts from bumper upper retainer assembly.
11. Remove mounting bolts from bumper stay assembly (right/left).
12. Remove mounting bolts from license plate bracket.

INSTALLATION

Install in the reverse order of removal.

NOTE:
After installation, adjust the clearance.

REAR BUMPER

PFP:H5022

Removal and Installation

AIS005S7

CAUTION:

Bumper fascia is made of resin. Do not apply strong force to it, and be careful to prevent contact with oil.

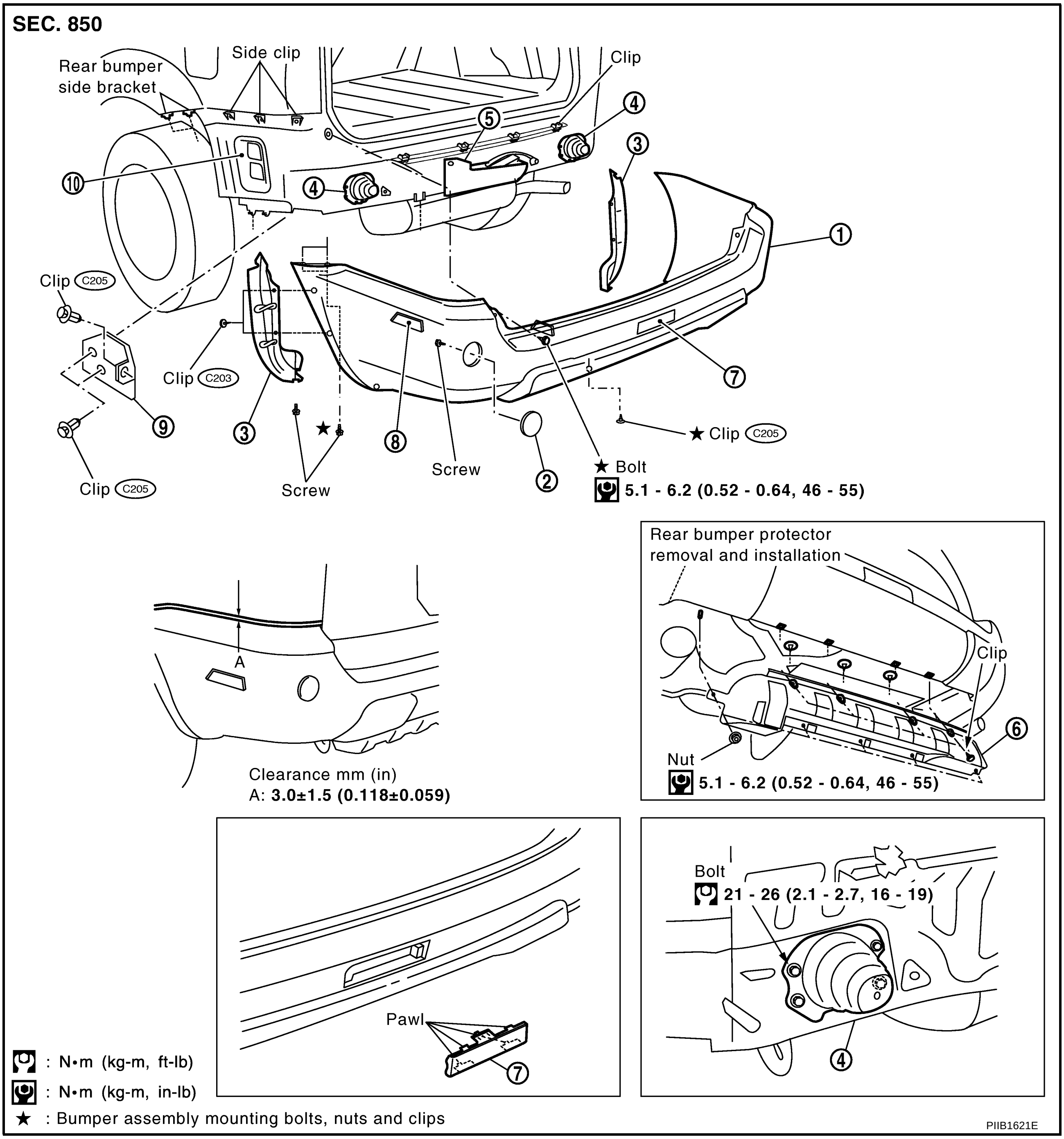

1. Rear bumper fascia
2. Reflector
3. Bumper closing (right/left)
4. Bumper stay (right/left)
5. Rear bumper energy absorber
6. Rear bumper protector
7. Rear bumper finisher
8. Rear side marker lamp
9. Fuel tube cover
10. Drafter assembly

REMOVAL

1. Remove mounting nuts and clips on rear bumper protector.
2. Remove mounting nuts and clips on bumper closing (right/left).
3. Remove rear side marker lamp and disconnect rear side marker lamp harness connectors.

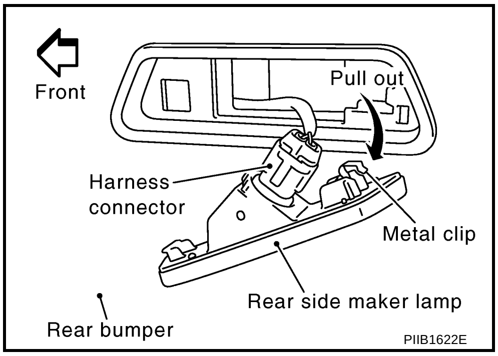

4. Remove mounting screws on rear fender protectors.
5. Remove mounting bolts and clips on rear bumper fascia.
6. Spread bumper fascia toward the outside and remove it from the side clips.
7. Pull bumper fascia assembly straight rearward to remove.
   CAUTION:
   When removing bumper fascia, 2 workers are required so as to prevent it from dropping.
8. Remove rear bumper energy absorber.
9. Remove mounting bolts on bumper stay (right/left).
10. Remove rear bumper finisher. and remove the reflectors from bumper.

INSTALLATION

Install in the reverse order of removal.

NOTE:
After installation, adjust the clearance.

REMOVAL AND INSTALLATION OF FUEL TUBE COVER

Removal

1. Remove clips of fuel tube cover.
2. Remove fuel tube cover.

Installation

Install in the reverse order of removal.

FRONT GRILLE

PFP:62310

Removal and Installation

AIS005S8

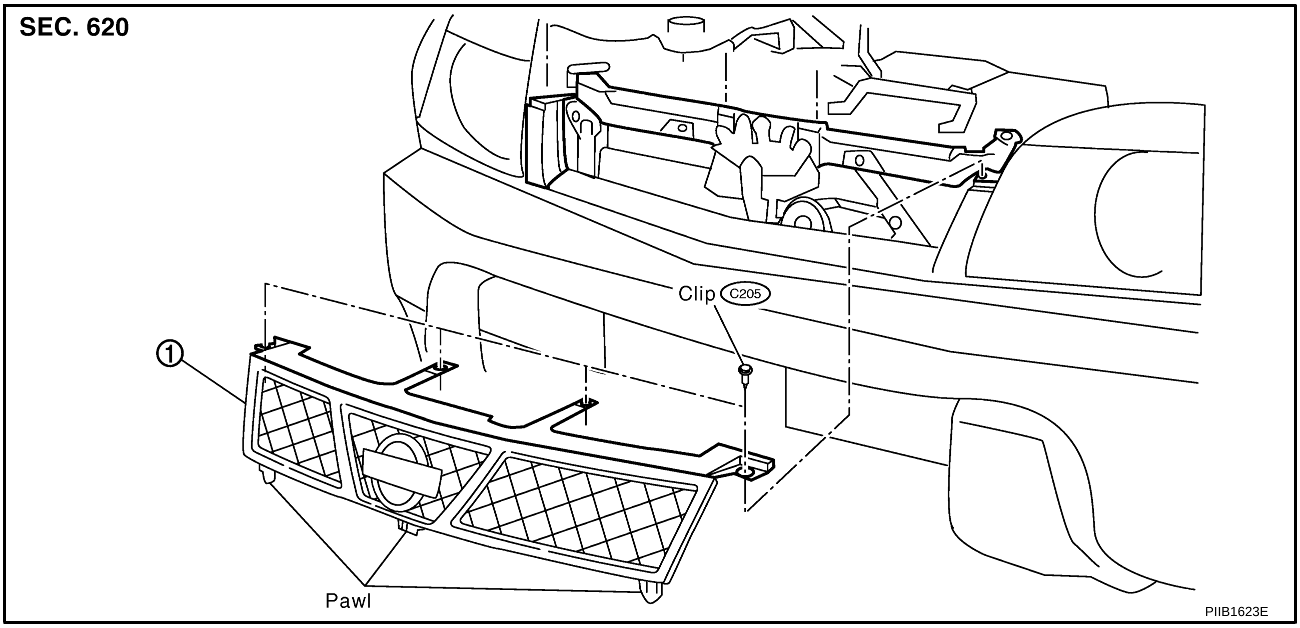

1. Front grille

CAUTION:

Apply protection tape around outer circumference of front grille (bumper fascia side).

REMOVAL

1. Remove clips from top edge of grille.
2. Disconnect pawls, and remove front grille.

INSTALLATION

Install in the reverse order of removal.

COWL TOP

PFP:66100

Removal and Installation

AIS005S9

REMOVAL

1. Remove wiper arms (left and right). Refer to WW-6, "Removal and Installation of Front Wiper Arms, Adjustment of Wiper Arms Stop Location" .
2. Remove cowl top seal rubber.
3. Remove cowl top rubber mounting clips. Then remove cowl top cover.

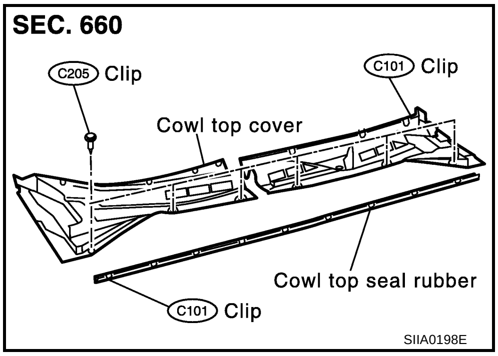

INSTALLATION

Install in the reverse order of removal.

CAUTION:

- **When installing cowl top cover, make sure that blind clips are securely fitted in panel holes on body, and then press them in.**
- **After installing, perform adjustment of wiper arms. Refer to WW-6, "Removal and Installation of Front Wiper Arms, Adjustment of Wiper Arms Stop Location" .**

FENDER PROTECTOR

PFP:63840

Removal and Installation

AIS005SA

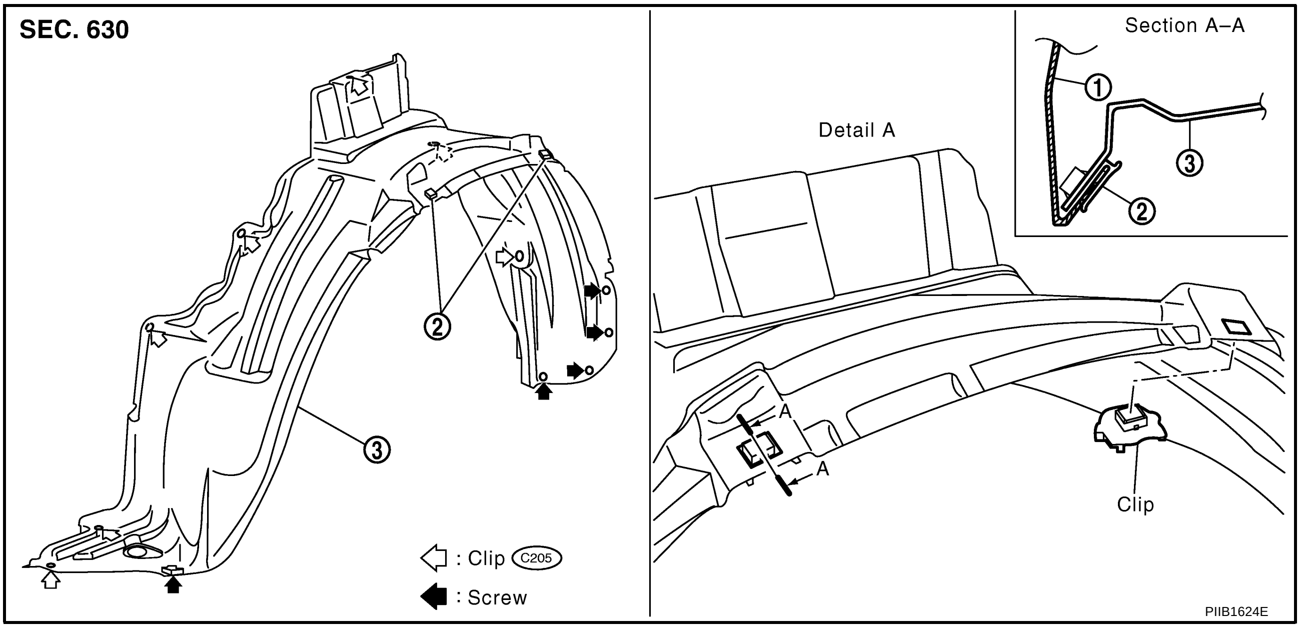

1. Front fender
2. Clip
3. Fender protector

REMOVAL

1. Remove screws and clips of fender protector.
2. Remove fender protector.

INSTALLATION

Install in the reverse order of removal.

DOOR OUTSIDE MOLDING

PFP:82820

Removal and Installation

AIS005SB

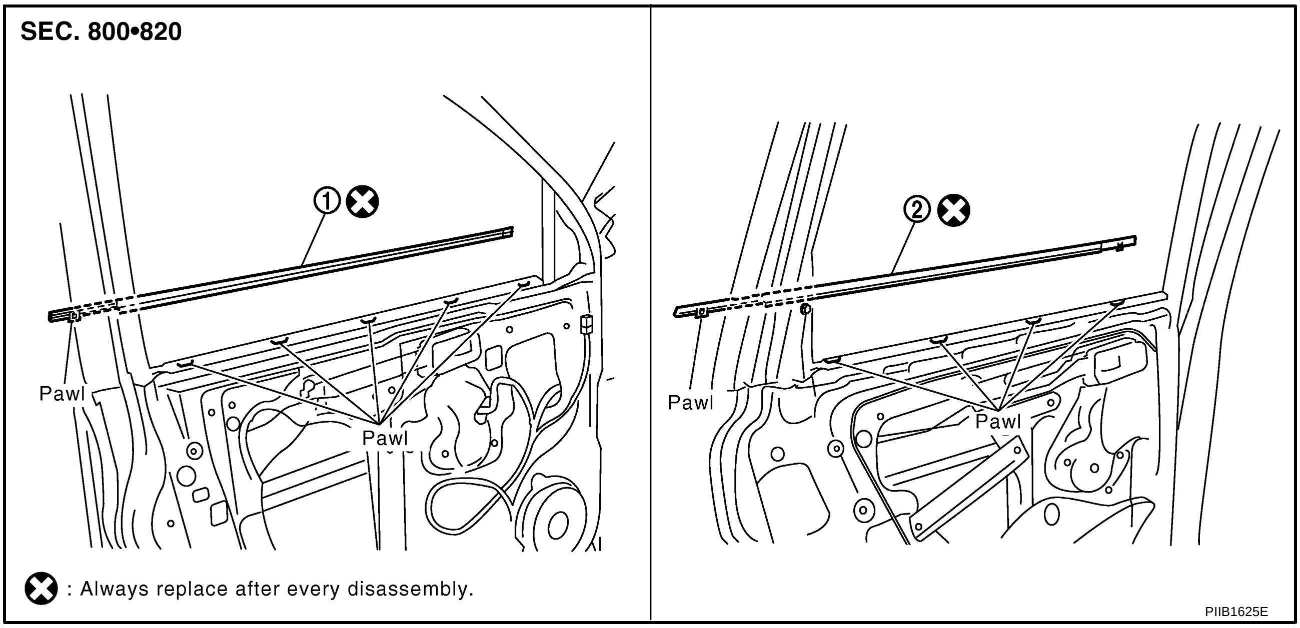

1. Front door outside molding
2. Rear door outside molding

FRONT DOOR OUTSIDE MOLDING

Removal

1. Roll the front door window all the way up.
2. Remove front door finisher. Refer to EI-32, "Removal and Installation" .
3. Remove corner cover and door mirror. Refer to GW-64, "Removal and Installation" .
4. Disengage front door outside molding pawl.
5. Reaching from inner side of door, use a clip clamp tool to disengage front door outside molding from the pawl.

   NOTE:
   Insert clip clamp tool into the door pawl, then disengage by pressing in the direction of arrow. (See figure on the right)

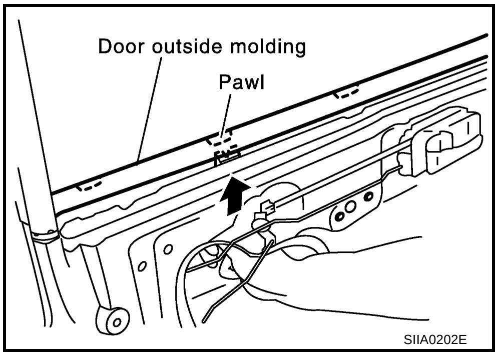

Installation

Install in the reverse order of removal.

NOTE:
To install, press molding into the outer panel flange and engage the pawls.

REAR DOOR OUTSIDE MOLDING

Removal

1. Roll the rear door window all the way up.
2. Remove rear door finisher. Refer to EI-32, "Removal and Installation" .
3. Remove corner inner cover and corner outer cover. Refer to GW-59, "Removal and Installation" .
4. Disengage rear door outside mold pawl.

5. Reaching from inner side of door, use a clip clamp tool to disengage rear door outside molding from the pawl.

   NOTE:
   Insert clip clamp tool into the door pawl, then disengage by pressing in the direction of arrow. (See figure on the right)

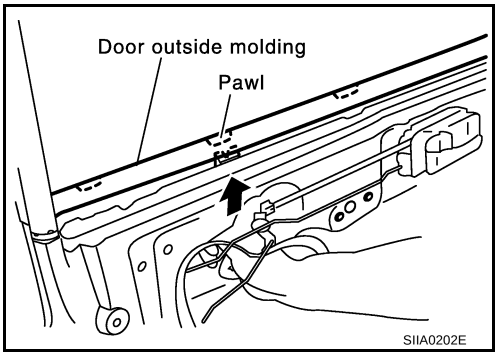

Installation

Install in the reverse order of removal.

NOTE:
To install, press molding into the outer panel flange and engage the pawls.

CAUTION:

- **Be careful not to apply excessive force when removing because it is easy deform parts.**
- **After removal, visually inspect molding, and it is deformed, replace it with new molding.**

SIDE GUARD MOLDING

PFP:76840

Removal and Installation

AIS005SC

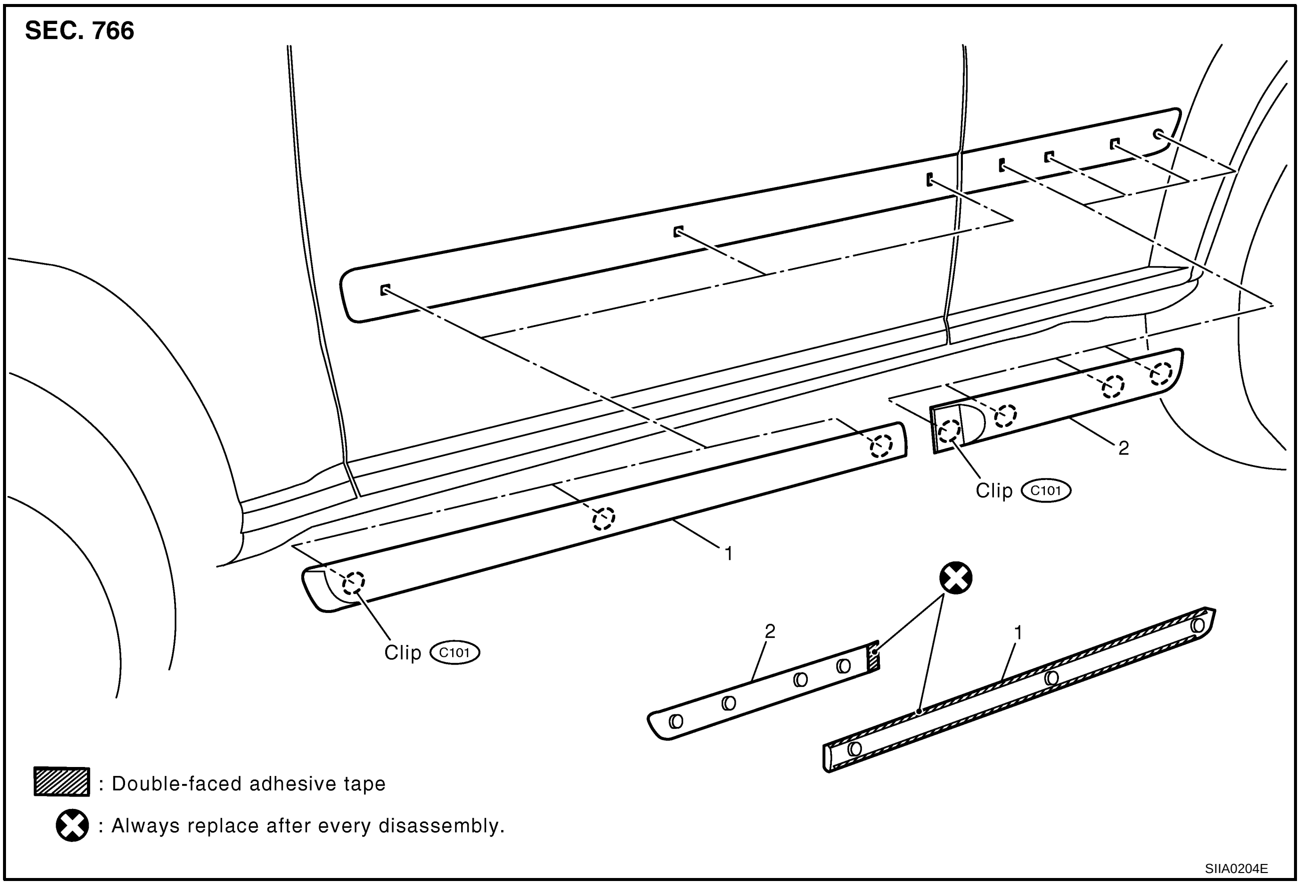

1. Side guard molding (front)
2. Side guard molding (rear)

SIDE GUARD MOLDING (FRONT AND REAR)

Removal

1. Apply masking tape around outer circumference of side guard molding.
2. Remove double-faced adhesive tapes with (wide) resin spatula. Disengage clips and remove side guard molding (front and rear).

Installation

1. Remove double-faced adhesive tape remaining on vehicle.
2. Clean contact surface of vehicle (to side guard molding), and install side guard molding to vehicle.

CAUTION:

- **Do not let air between contact surfaces when installing.**
- **To secure contact, do not wash vehicle within 24 hours after installation.**

DOOR OUTSIDE LOWER MOLDING
PFP:82877

Removal and Installation
AIS005SD

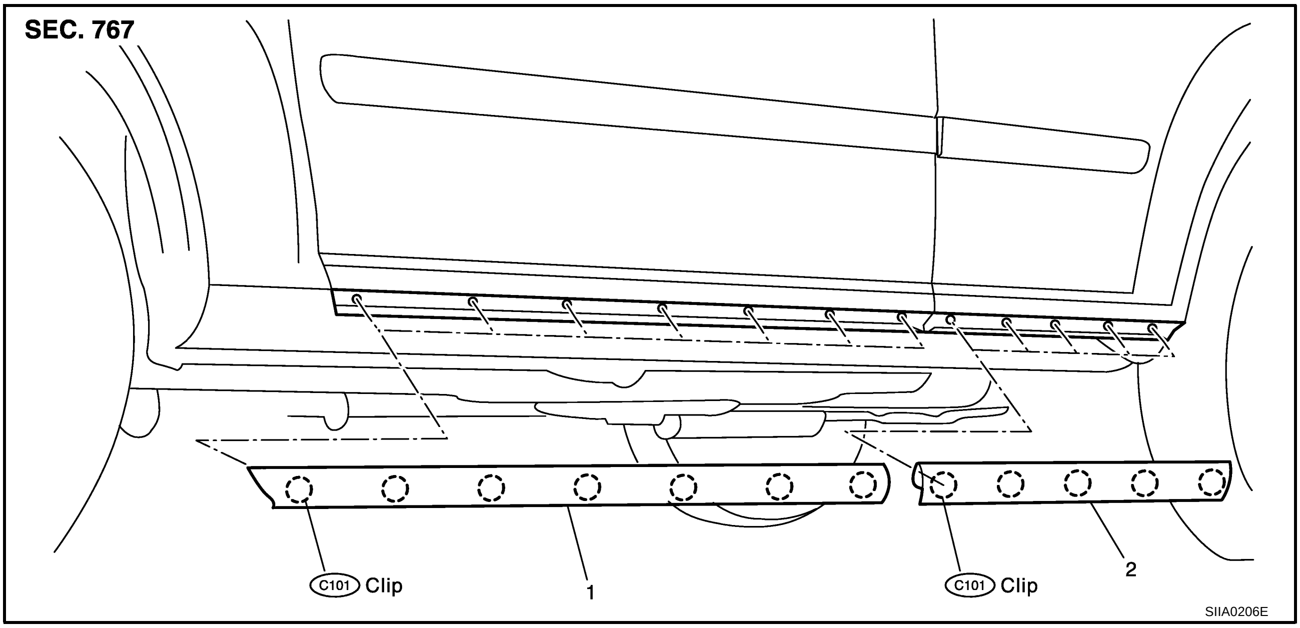

1. Door outside molding (front)
2. Door outside molding (rear)

DOOR OUTSIDE LOWER MOLDING (FRONT AND REAR)

Removal

1. Remove clips of door outside lower molding.
2. Remove door outside lower molding (front and rear).

Installation

Install in the reverse order of removal.

CAUTION:

When installing door outside lower molding, make sure that blind clips are securely fitted in panel hole on body and then press them in.

SIDE SILL PROTECTOR

PFP:86856

Removal and Installation

AIS005SE

REMOVAL

1. Remove screw and clip of side sill protector.
2. Remove side sill protector.

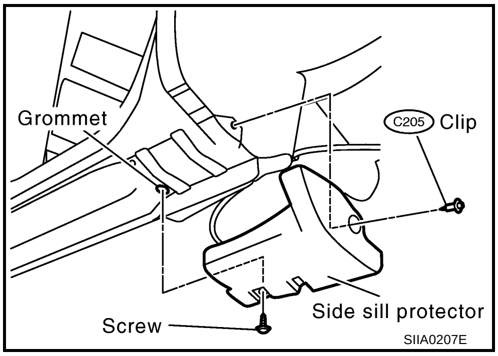

INSTALLATION

Install in the reverse order of removal.

MUDGUARD

PFP:63854

Removal and Installation

AIS0061I

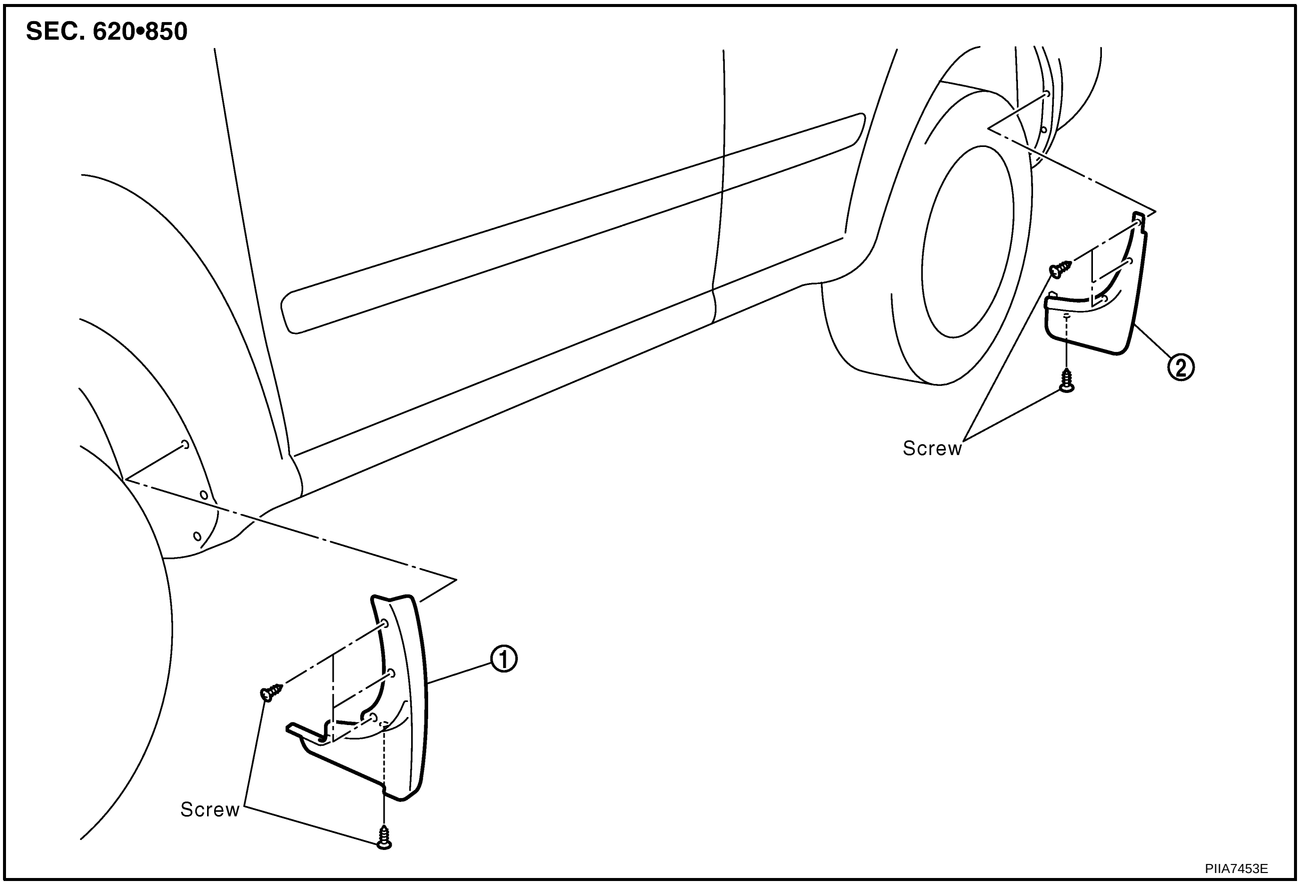

1. Mudguard (front)
2. Mudguard (rear)

REMOVAL

1. Remove mounting screws from mudguard.
2. Remove mudguard assembly (front/rear).

INSTALLATION

Install in the reverse order of removal.

ROOF RAIL

PFP:73820

Removal and Installation for Hyper Roof Rail

AIS0074X

CAUTION:

Be careful not to damage the body.

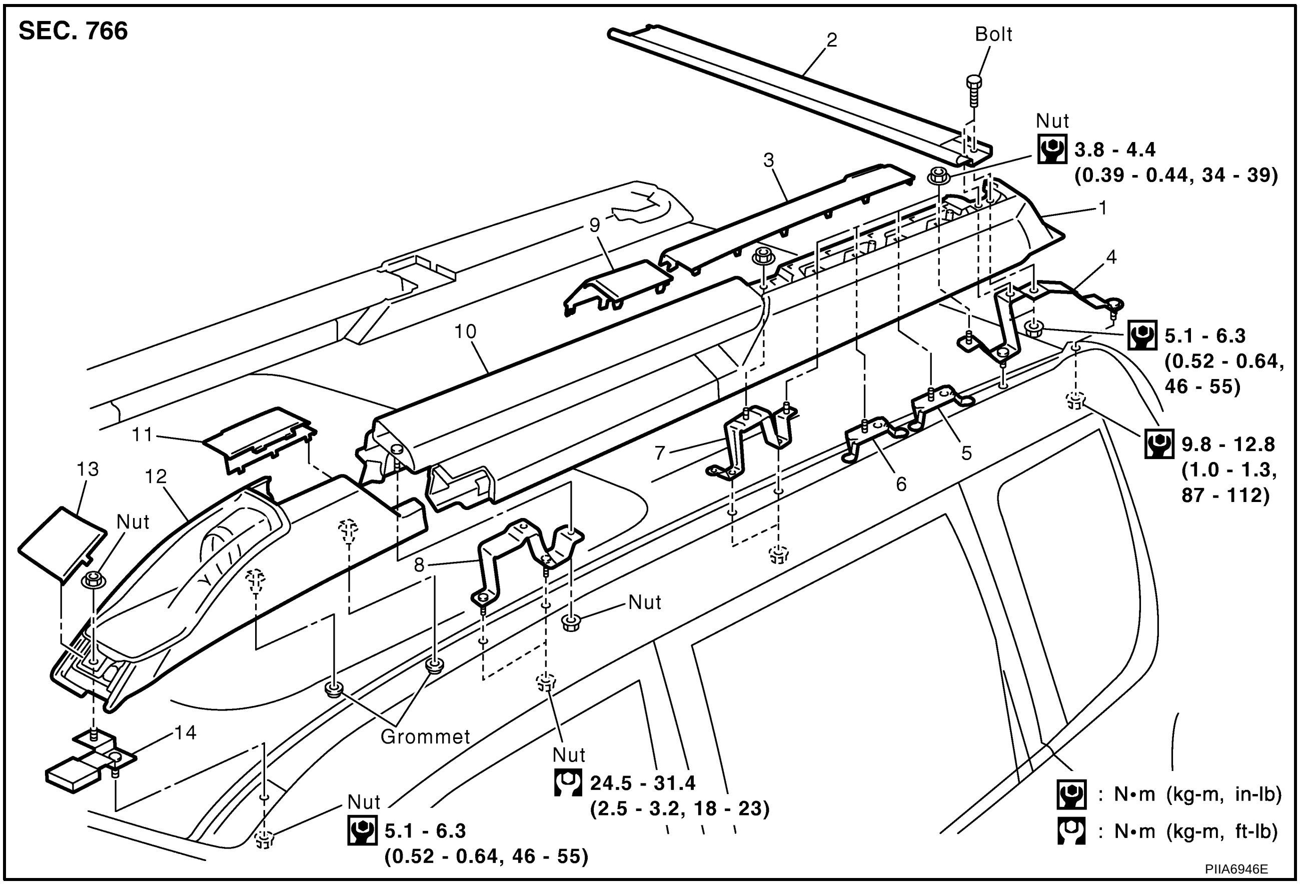

1. Roof rail
2. Rear spoiler
3. Hyper roof rail rear cap
4. Rear spoiler bracket
5. Hyper roof rail center bracket (rear)
6. Hyper roof rail center bracket (front)
7. Hyper roof rail bracket (rear)
8. Hyper roof rail bracket (front)
9. Hyper roof rail front cap
10. Side rail
11. Driving lamp cap (rear)
12. Driving lamp assembly
13. Driving lamp cap (front)
14. Driving lamp bracket

REMOVAL

1. Remove driving lamp cap (front).
2. Remove driving lamp mounting nuts.
3. Pull driving lamp upward to disconnect clips of driving lamp from roof panel.
4. Disconnect driving lamp harness connector.
5. Remove driving lamp assembly.
6. Remove hyper roof rail caps (front and rear).
7. Remove side rail mounting bolts and nuts, then remove side rail.
8. Remove rear spoiler mounting bolts, then remove rear spoiler.
9. Remove hyper roof rail mounting nuts, then remove hyper roof rail assembly.
10. Remove headlining. Refer to EI-40, "HEADLINING" .
11. Remove driving lamp bracket, hyper roof rail bracket (front and rear) and roof spoiler bracket.

INSTALLATION

Installation is in the reverse order of removal.

Removal and Installation for Roof Rail

AIS0074Y

CAUTION:

Be careful not to damage the body.

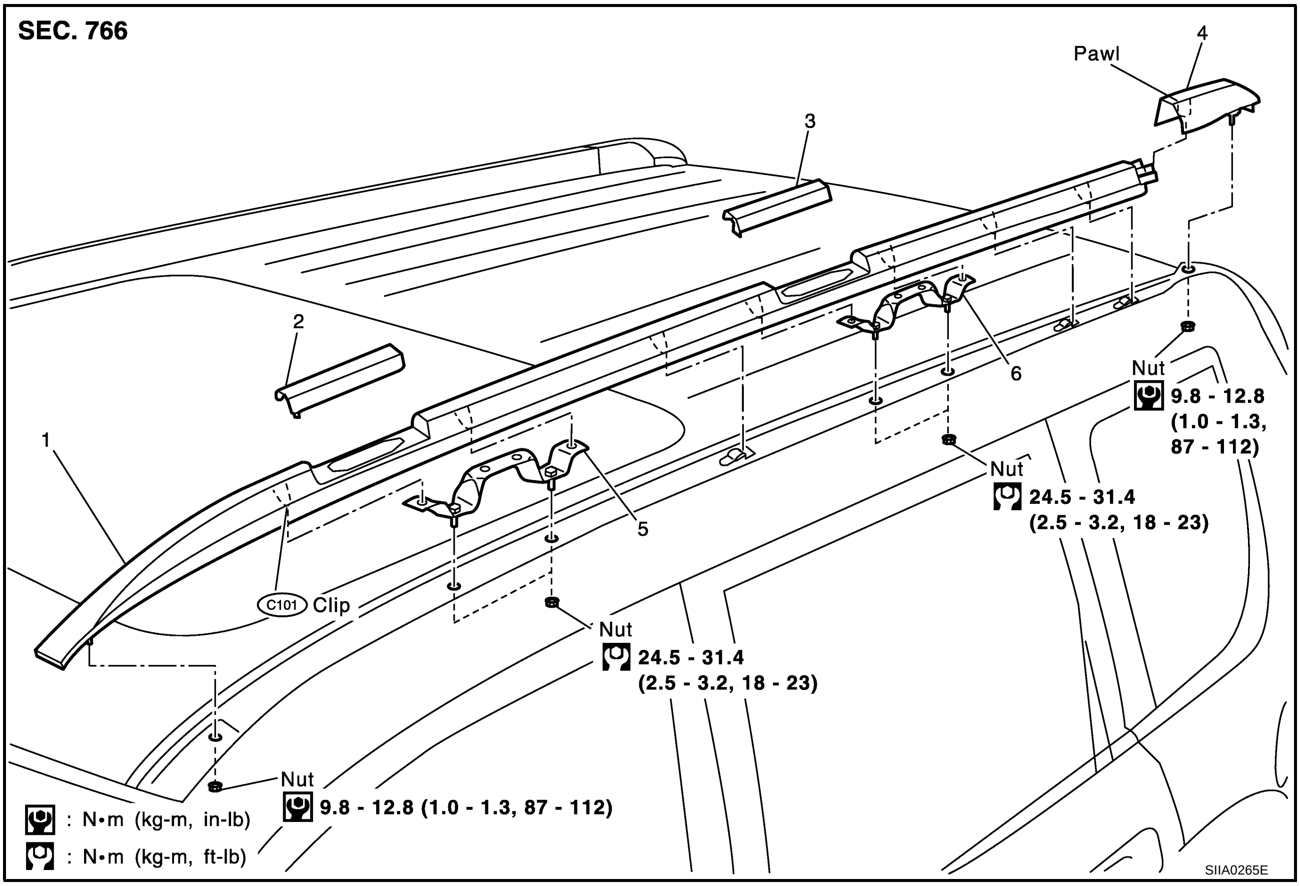

1.	Roof rail	2.	Front cap	3.	Rear cap
4.	Roof rail cover	5.	Roof rail bracket (front)	6.	Roof rail bracket (rear)

REMOVAL

1. Remove headlining. Refer to EI-40, "HEADLINING" .
2. Remove roof rail mounting nuts and roof rail covers (or roof spoiler) mounting nuts.

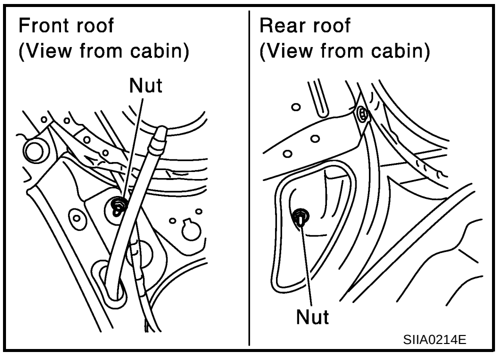

3. Remove roof rail bracket mounting nuts (front and rear).

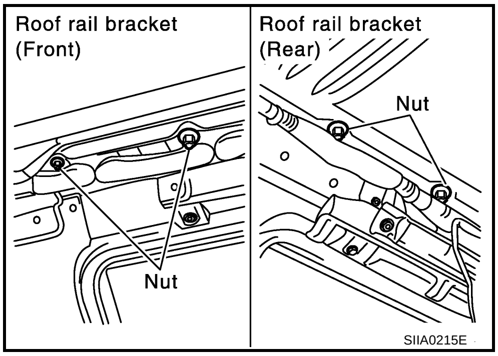

4. Remove roof rail covers (or roof spoiler). For removal of roof spoiler, refer to EI-30, "ROOF SPOILER" .
5. Remove roof rail mounting clips, and remove roof rails.

INSTALLATION

Installation is in the reverse order of removal.

ROOF SPOILER

PFP:96030

Removal and Installation

AIS005SH

CAUTION:

Be careful not to damage the body.

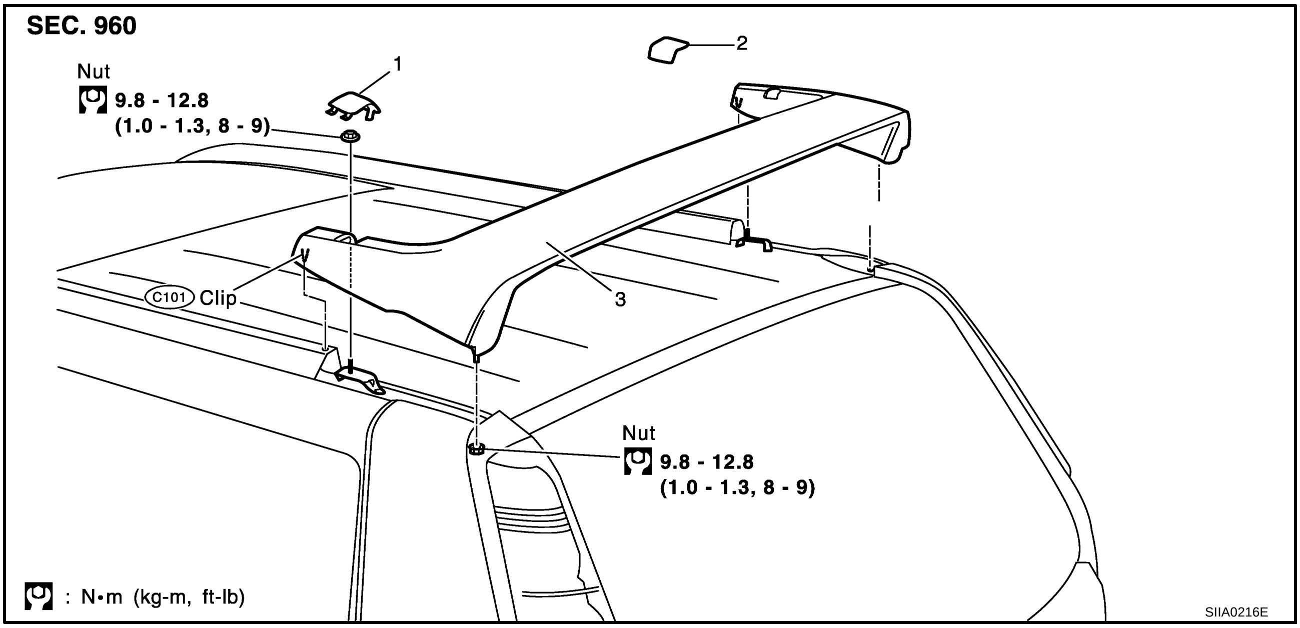

1. Cover (left) 2. Cover (right) 3. Roof spoiler

REMOVAL

1. Remove headlining. Refer to EI-40, "Removal and Installation" .
2. Remove covers (left and right).
3. Remove roof spoiler mounting nuts (upper and lower roof surfaces).
4. Pull roof spoiler upwards. Remove pawls (1 each on left/right) which are engaged with the roof rails. Remove roof spoiler.

INSTALLATION

Install in the reverse order of removal.

LICENSE LAMP FINISHER

PFP:84810

Removal and Installation

AIS005SI

CAUTION:
Be careful not to damage the body.

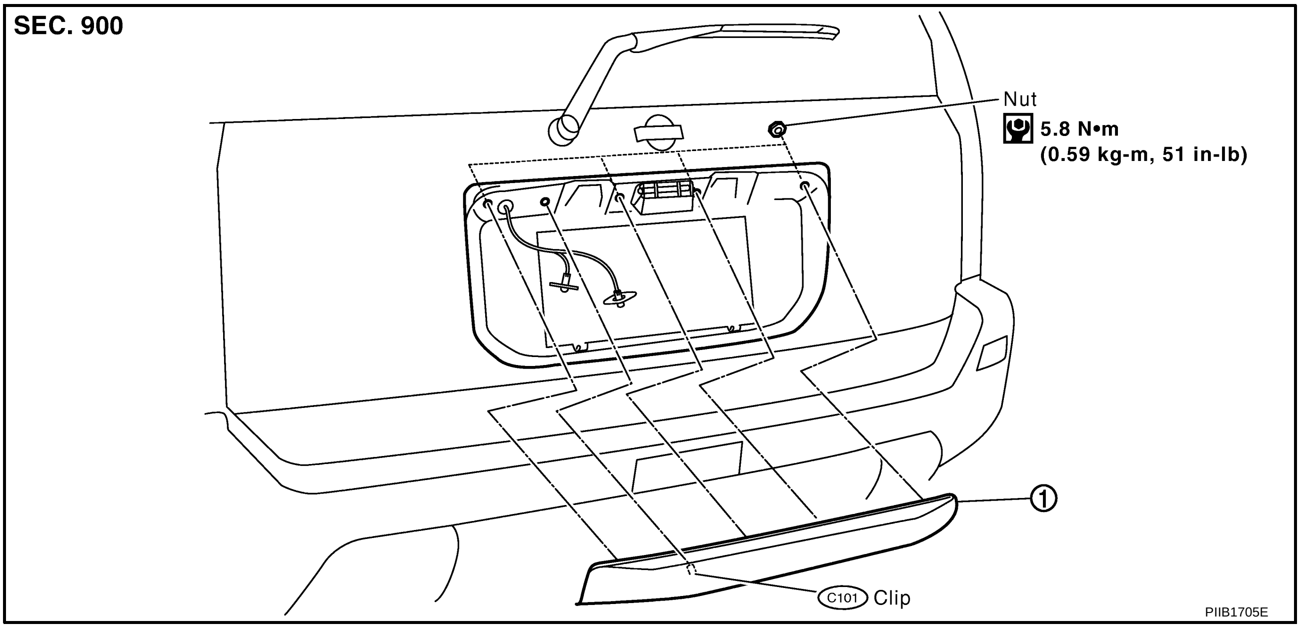

1. License lamp finisher

REMOVAL

1. Remove back door finisher. Refer to EI-35, "Removal and Installation" .
2. Remove license plate lamp. Refer to LT-40, "Removal and Installation of License Plate Lamp" .
3. Remove license lamp finisher mounting nuts and clips. Then remove license lamp finisher.

INSTALLATION

Install in the reverse order of removal.

DOOR FINISHER

PFP:80900

Removal and Installation

AIS005SJ

CAUTION:

Wrap tip of flat-bladed screwdriver with a cloth when removing metal clips of door finisher.

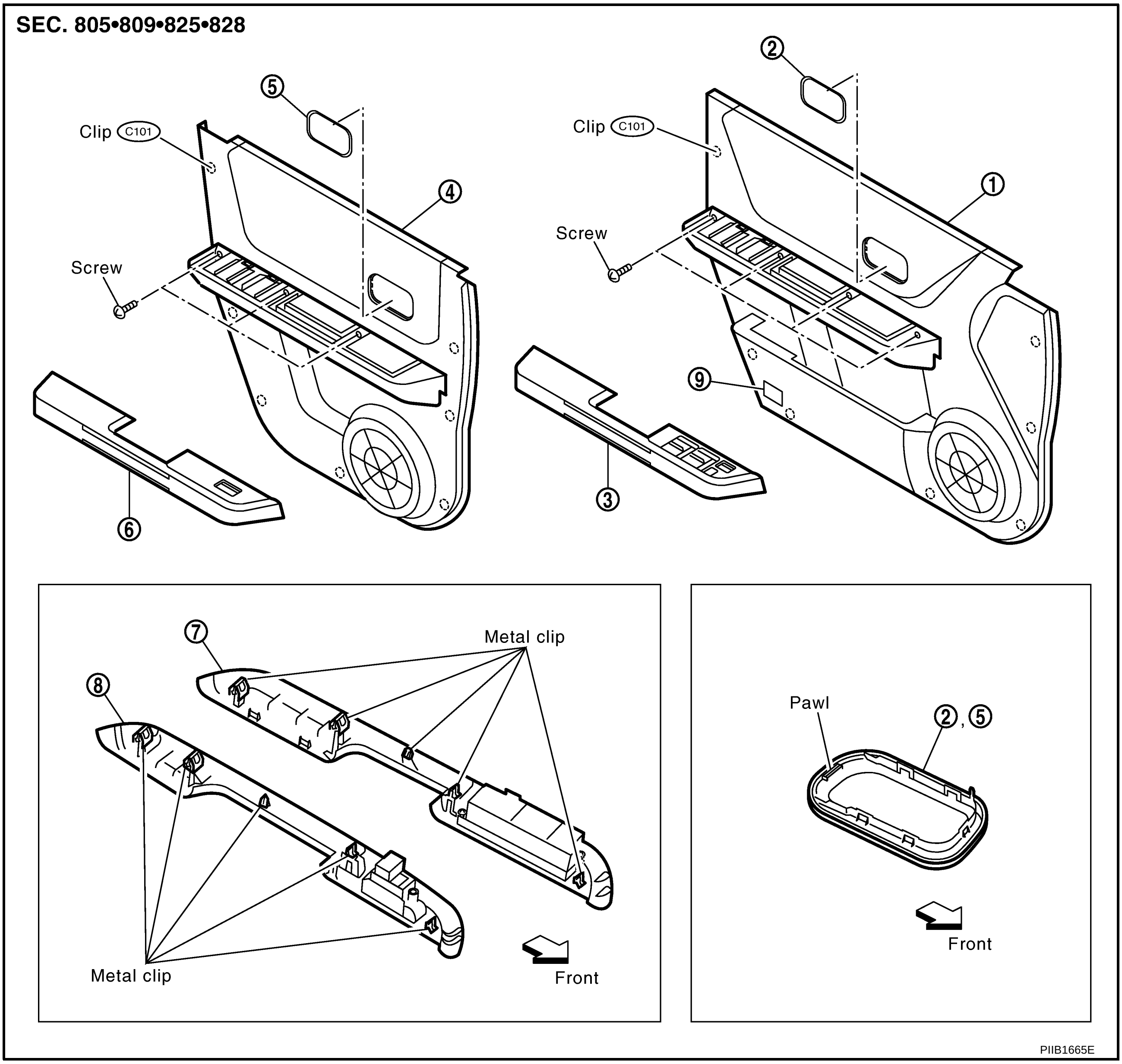

1. Front door finisher
2. Inside handle escutcheon
3. Front door armrest assembly
4. Rear door finisher
5. Inside handle escutcheon
6. Rear door armrest assembly
7. Power window switch finisher (front)
8. Power window switch finisher (rear)
9. Step lamp

FRONT AND REAR DOOR FINISHER

Removal

1. Insert a screwdriver, wrapped with a cloth, into door trim cutout on the inside handle escutcheon. Disengage the pawls on the front, upper side (2) and lower side (2). Slide frontwards and disengage the rear side pawls to remove.

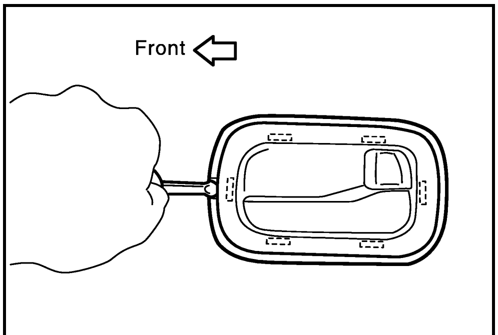

SIIA0391E

2. Insert a screwdriver, wrapped with a cloth, into the cutout on the front edge of front and rear door armrest assembly. Unfasten the metal clips on the front side.

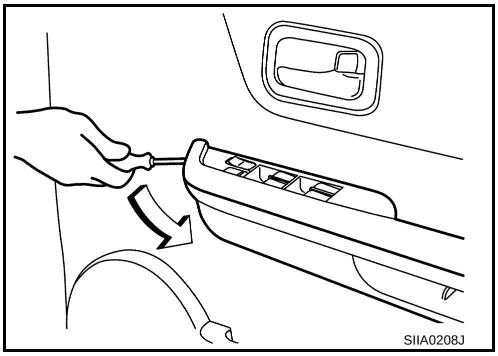

SIIA0208J

3. Insert the screwdriver into the gap and remove metal clips on the rear edge of front and rear door armrest assembly.

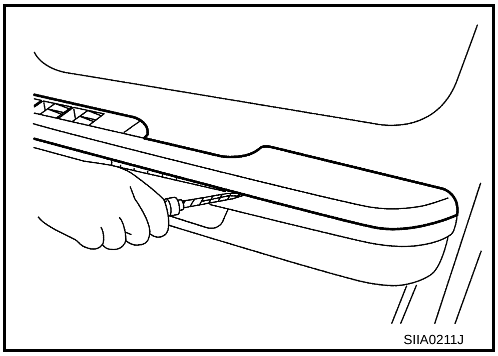

SIIA0211J

4. Disconnect and remove power window switch harness connector.
5. Remove front and rear door armrest assembly.
6. Remove power window switch finisher (front/rear).
7. Remove door finisher mounting screw.
8. Remove door finisher mounting clips.

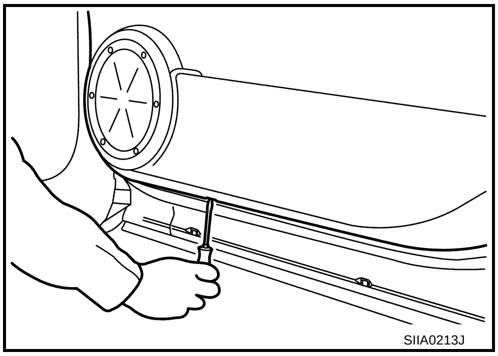

SIIA0213J

CAUTION:

- **Insert a screwdriver or clip clamp remover into the part shown by the arrow (between the body side panel and the clips). Remove clips.**
- **When installing, confirm clips are surely aligned with the holes on the body side, then press in.**

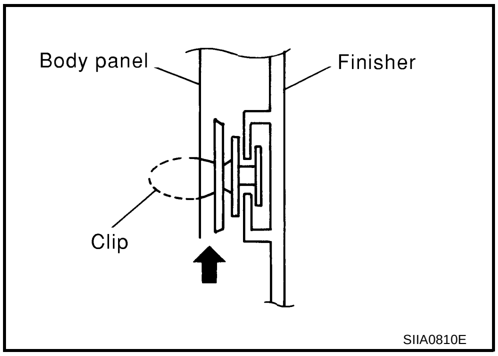

9. Pull the front and rear door finisher upwards to remove.

Installation

Install in the reverse order of removal.

NOTE:

To install the finisher, confirm clips are surely aligned with the holes on the body side panel, then press in.

BACK DOOR TRIM

PFP:90900

Removal and Installation

AIS005SK

REMOVAL

1. Remove hook on back door finisher.
2. Remove clips of back door finisher.

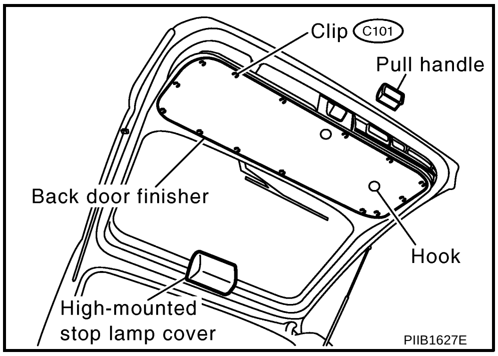

PIIB1627E

CAUTION:

- **Insert a screwdriver or clip clamp remover into the part shown by the arrow (between the body side panel and the clips). Remove clips.**
- **When installing, confirm clips are surely aligned with the holes on the body side, then press in.**

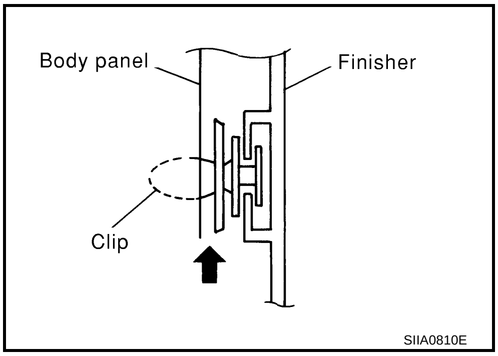

SIIA0810E

3. Remove back door finisher.
4. Remove pull handle.

INSTALLATION

Install in the reverse order of removal.

NOTE:

When installing, confirm clips are surely aligned with the holes on the body side panel, then press in.

Removal and Installation of High-Mounted Stop Lamp Cover

Remove high-mounted stop lamp. Refer to LT-34, "Removal and Installation of High-Mounted Stop Lamp" .

BODY SIDE TRIM

PFP:76913

Removal and Installation

AIS005SL

CAUTION:

Wrap the tip of flat-bladed screwdriver with a cloth when removing metal clips of body side trim.

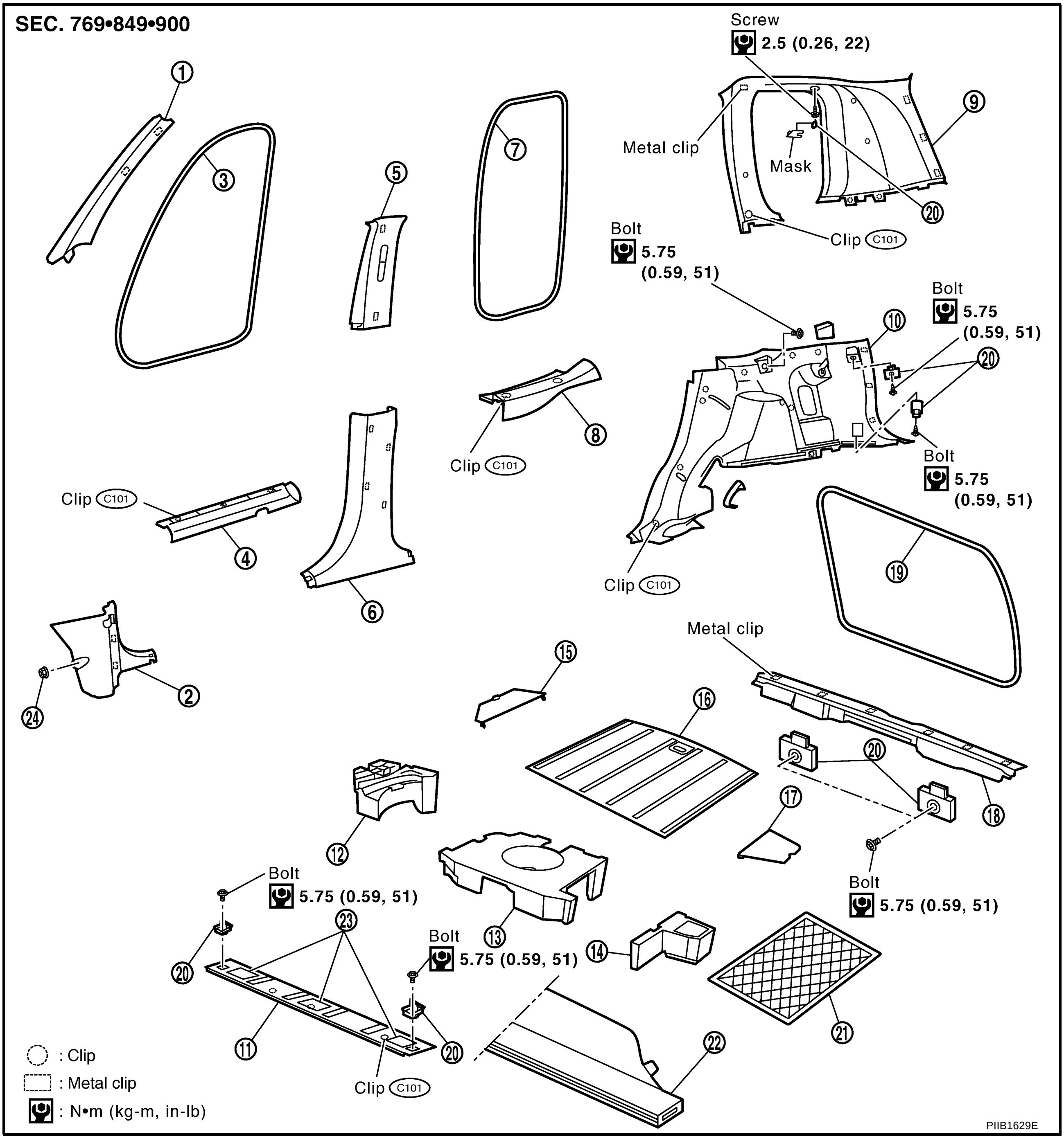

1. Front pillar garnish	2. Dash side finisher	3. Body side welt (front)
4. Kicking plate (front)	5. Center pillar upper garnish	6. Center pillar lower garnish
7. Body side welt (rear)	8. Kicking plate (rear)	9. Rear pillar finisher
10. Luggage side lower finisher	11. Luggage floor board (front)	12. Luggage floor rear spacer (right) or tool box
13. Luggage floor rear spacer (center)	14. Luggage floor rear spacer (left)	15. Luggage floor board (right)
16. Luggage floor board (rear)	17. Luggage floor board (left)	18. Luggage rear plate
19. Back door weather-strip	20. Hook	21. Net
22. Tonneau cover	23. Top tether strap child restraint cover	24. Resin nut

FRONT PILLAR GARNISH

Removal

1. Remove clips of front pillar garnish.
2. Remove front pillar garnish.

Installation

Installation is in the reverse order of removal.

DASH SIDE FINISHER

Removal

Remove dash side finisher mounting resin nut and clips, and then remove dash side finisher.

Installation

Install in the reverse order of removal.

KICKING PLATE (FRONT/REAR)

Removal

Remove kicking plate mounting clips, and then remove kicking plate (front/rear).

Installation

Install in the reverse order of removal.

CENTER PILLAR LOWER GARNISH

Removal

1. Remove front and rear kick panels.
2. Remove clips of center pillar lower garnish and remove center pillar lower garnish.

Installation

Installation is in the reverse order of removal.

CENTER PILLAR UPPER GARNISH

Removal

1. Remove front seat belt shoulder anchor bolt. Refer to SB-3, "Removal and Installation of Front Seat Belt" .
2. Remove kicking plate (front/rear).
3. Remove center pillar lower garnish.
4. Remove center pillar upper garnish mounting clips, and then remove center pillar upper garnish.

Installation

Install in the reverse order of removal.

BODY SIDE WELT (FRONT/REAR)

Removal

1. Remove front seat belt shoulder anchor bolt. Refer to SB-3, "Removal and Installation of Front Seat Belt" .
2. Remove kicking plate (front/rear).
3. Remove center pillar lower garnish.
4. Remove center pillar upper garnish.
5. Remove body side welt (front/rear).

Installation

Install in the reverse order of removal.

REAR PILLAR FINISHER

Removal

1. Remove kicking plate (rear).
2. Remove bolts from luggage side lower finisher of hook.
3. Remove clips of luggage side lower finisher and remove luggage side lower finisher.
4. Remove rear seat belt shoulder anchor bolt. Refer to SB-4, "Removal and Installation of Rear Seat Belt" .
5. Remove mask and screw from rear pillar finisher of hook.
6. Remove clips of rear pillar finisher and remove rear pillar finisher.

CAUTION:

- **Insert a screwdriver or clip clamp remover into the part shown by the arrow (between the body side panel and the clips). Remove clips.**
- **When installing, confirm clips are surely aligned with the holes on the body side, then press in.**

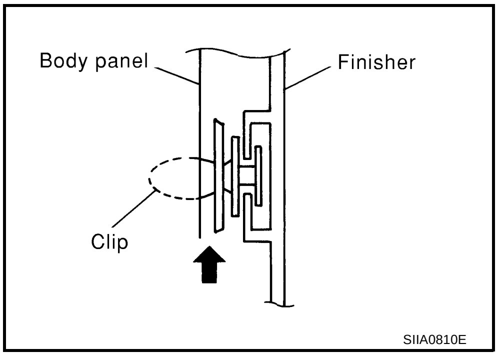

Installation

Install in the reverse order of removal.

NOTE:

When installing, confirm clips are aligned with the body side panel holes, and then press in.

LUGGAGE REAR PLATE

Removal

Remove luggage rear plate mounting clips, and then remove luggage rear plate.

Installation

Install in the reverse order of removal.

LUGGAGE SIDE LOWER FINISHER

Removal

1. Remove luggage floor boards and luggage floor spacers.
2. Remove luggage rear plate.
3. Remove kicking plate (rear).
4. Remove bolts from luggage side lower finisher of hook.
5. Remove luggage side lower finisher.

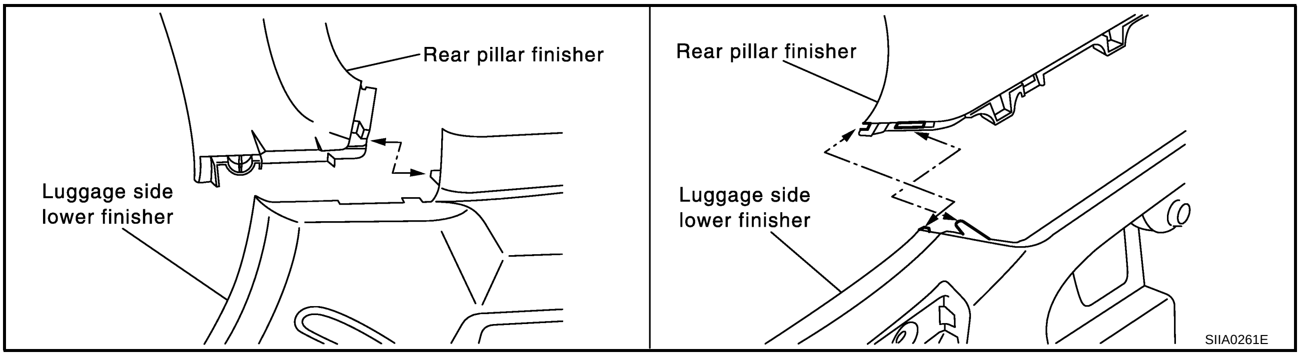

NOTE:

When removing or installing, pay attention to pawl engagement with the rear pillar finisher.

Installation

Install in the reverse order of removal.

FLOOR TRIM

PFP:74902

Removal and Installation

AIS005SM

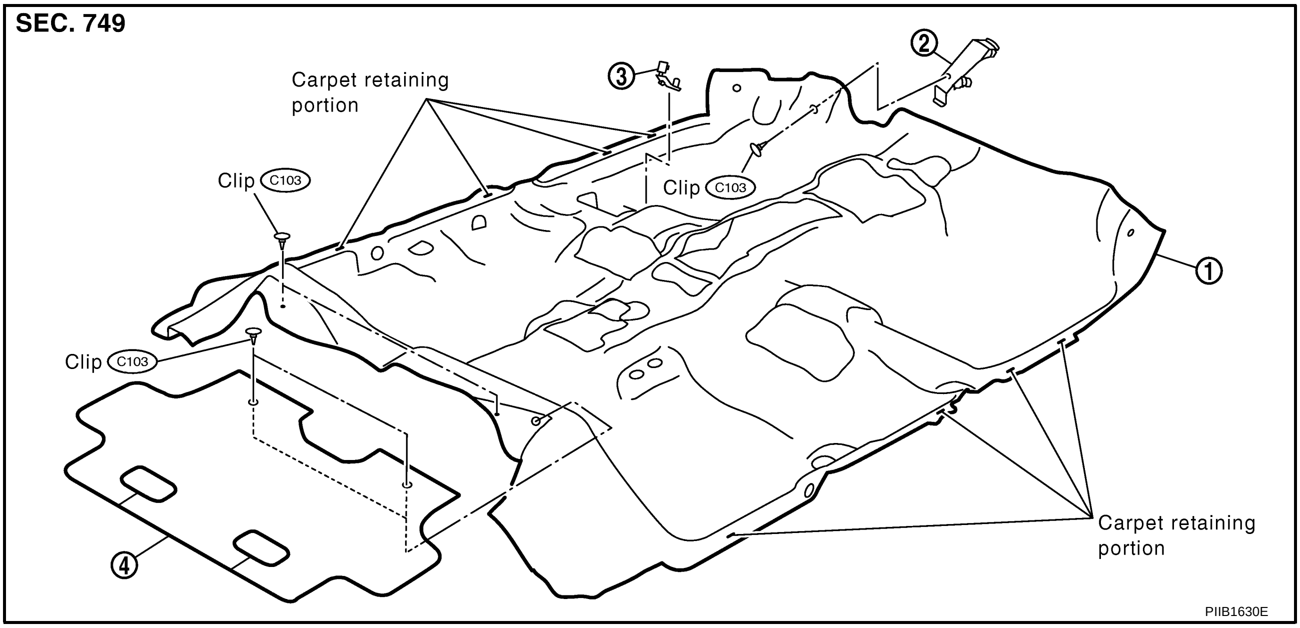

1. Floor carpet
2. Footrest metal
3. Carpet hook
4. Rear floor carpet

REMOVAL

1. Remove front seat and rear seat cushions. Refer to SE-19, "Removal and Installation" and SE-26, "Removal and Installation" .
2. Remove clips and remove rear floor carpet.
3. Remove center console.
4. Remove lower instrument cover.
5. Remove lower instrument center panel.
6. Remove front seat belt floor anchor bolt. Refer to SB-3, "Removal and Installation of Front Seat Belt" .
7. Remove kicking plate (front/rear).
8. Remove center pillar lower garnish.
9. Remove body side welts (front/rear).
10. Remove the dash side finisher.
11. Remove carpet hooks and clips.
12. Remove carpet from the carpet anchor clips.
13. Remove floor carpet.

NOTE:

- For steps 3-5, refer to IP-10, "INSTRUMENT PANEL ASSEMBLY" .
- For steps 7-10, refer to EI-36, "Removal and Installation" .

INSTALLATION

Install in the reverse order of removal.

HEADLINING

PFP:73910

Removal and Installation

AIS005SN

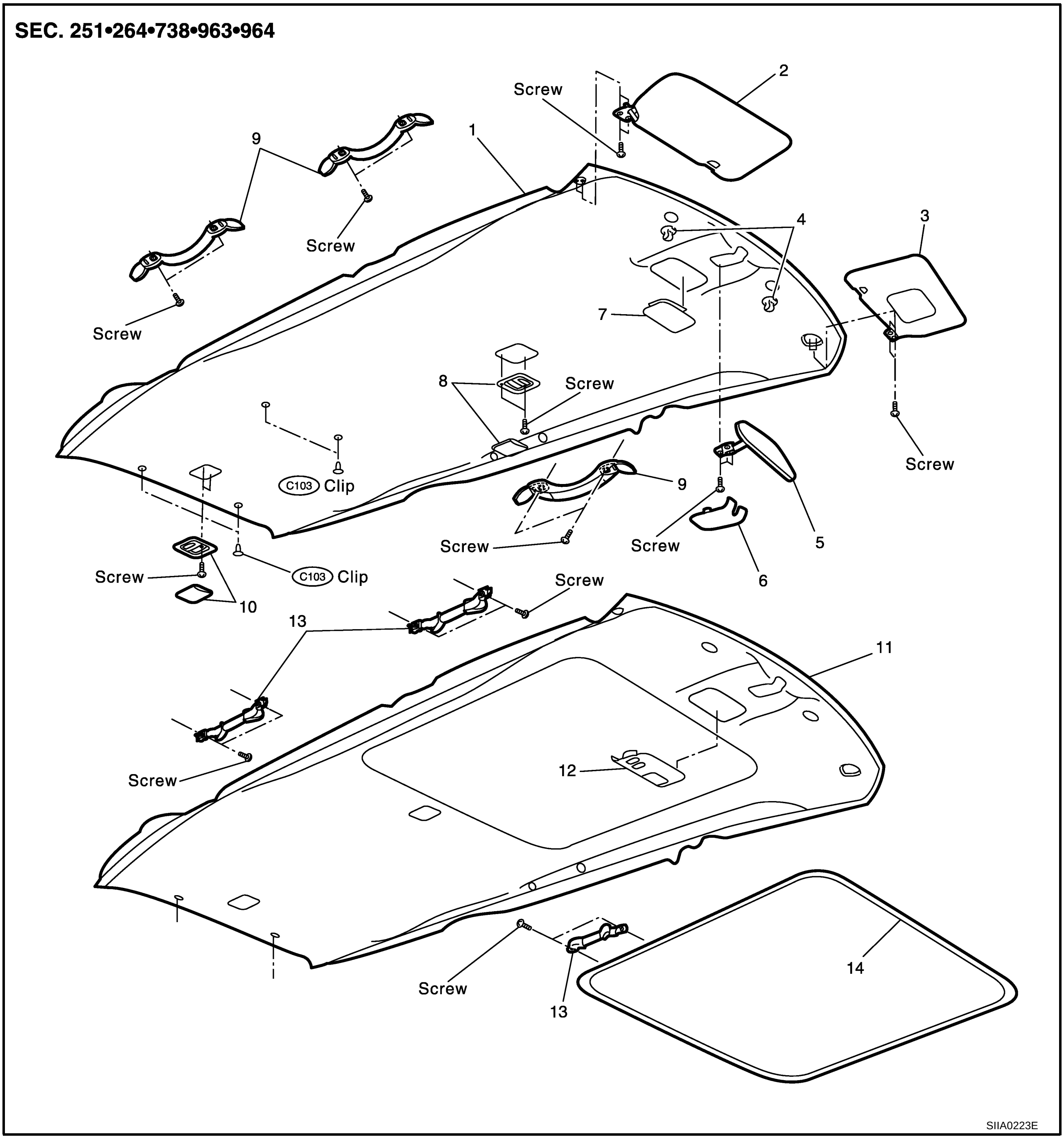

1.	Headlining (without sunroof)	2.	Sun-visor (right)	3.	Sun-visor (left)
4.	Sun-visor holder	5.	Inside mirror	6.	Inside mirror cover
7.	Map lamp	8.	Room lamp	9.	Assistance grip (fixed type)
10.	Luggage room lamp	11.	Headlining (with sunroof)	12.	Sunroof switch and map lamp
13.	Assistance grip (retractable type)	14.	Sunroof welt		

REMOVAL

1. Remove front pillar and center pillar garnish. Refer to EI-36, "Removal and Installation" .
2. Remove body side welt. Refer to EI-36, "Removal and Installation" .
3. Remove rear pillar finisher. Refer to EI-36, "Removal and Installation" .

4. Remove assistance grip.

   NOTE:
   When removing the assistance grip cover from a car with a sunroof, use a clip clamp tool to disengage the upper and lower pawls, then slide inwards and remove screws (1 each on left/right).

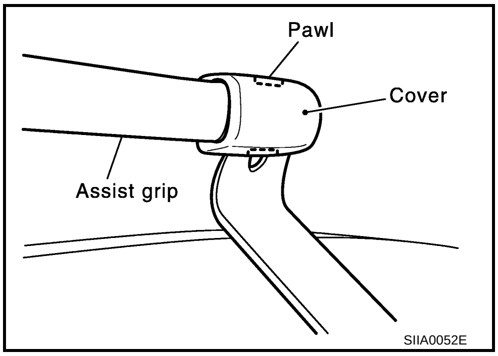

SIIA0052E

5. Remove map lamp, room lamp, and luggage room lamp. Refer to LT-67, "Removal and Installation of Map Lamp (Without Sunroof)" , LT-67, "Removal and Installation of Map Lamp (With Sunroof)" , LT-63, "Removal and Installation of Interior Room Lamp" and LT-63, "Removal and Installation of Luggage Room Lamp" .
6. Remove inside mirror cover.
7. Remove mounting screw on inside mirror and remove inside mirror.
8. Remove sun-visor (driver side and passenger side).
9. Remove headlining rear clips.
10. Remove sun-visor holder.

    NOTE:
    Insert a screwdriver into the cutout and rotate 90 degrees to remove.
11. Remove headlining through the back door opening.

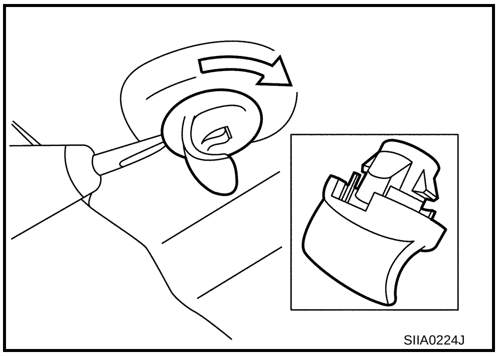
SIIA0224J

NOTE:
- Removal and installation must be performed by 2 persons.
- Do not strongly bend the headlining.

INSTALLATION

Install in the reverse order of removal.

NOTE:
When installing, insert the protrusions on the headlining into the holes in the upper part of center pillar.

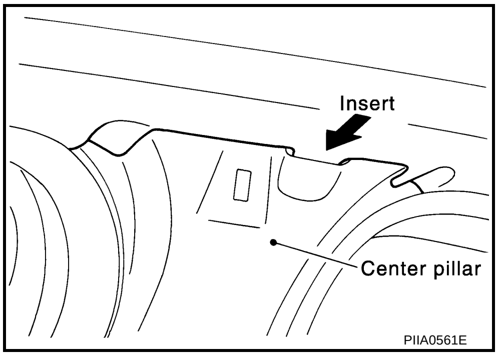

PIIA0561E

A B C D E F G H EI J K L M